Machine Translated by Google

acrilan

WATER
EXPERIENCE

40 years
of *luxury*

Machine Translated by Google

Machine Translated by Google

acrilan

WATER
EXPERIENCE

40 years
of *luxury*

Machine Translated by Google

Our Company. 4

Maxxcoat 8

Bathtubs - 2 persons
- **Queen.** 12
- **Princess.** 16
- **Tango.** 20
- **Olympia.** 24
- **Lona.** 28

Premium hydromassage systems. 32

Panels. 38

Bathtubs - Free standing
- **Evelyn.Gloss** 44
- **Evelyn.Matte** 46
- **Evelyn.Solid Surface** 48
- **Ithaki.** 50

Bathtubs - Round
- **Coral.** 56
- **Miami.** 58

Bathtus - Undermount
- **Oval.180** 64
- **Oval.190** 66
- **Style.** 68
- **Eliza.** 72

Bathtubs - Rectangular
- **Evita.** 78
- **Duoline.** 80
- **Mocca Line.** 84
- **Celine.** 88
- **Zira.** 92
- **Sine.** 96
- **Sunshine.** 100
- **Zeta.** 104
- **Style.** 108
- **Althea.** 110
- **Kyveli.** 112
- **Thassos.** 114
- **Skiathos.** 116
- **iOS.** 118
- **Dilos.** 122
- **Oval.180** 124
- **Oval.190** 126
- **Macedonia.** 128
- **Eliza.** 130
- **Kymi.** 132

Bathtub shelf. 134

Bathtubs - Corner
- **Serifos.** 138
- **Diva.** 140
- **Isabel.** 142
- **Poseidon.** 146
- **Ikaria.** 148
- **Santorini.** 150
- **Mykonos.145** 152
- **Mykonos.125** 154
- **Mykonos.105** 156
- **Mykonos.90** 158

Bathtubs - Asymmetrical
- **Kochili.170** 162
- **Kochili.160** 164
- **Kochili.153** 166
- **Kochili.145** 168
- **Kochili.135** 170
- **Kochili.125** 172

Pillows. 174

Bathtubs - Economy line
- **Minimal.** 178
- **Star Line Classic.** 180
- **Star Line.155** 182
- **Star Line.125** 184

Valves. 186

Faucets. 192

Hydrotherapy. 202

Cleaning & Disinfection. 210

Installation & Repair. 216

Shower trays. 222

Drain grids. 230

Shower Box
- **Young.140** 250
- **Young.120** 252
- **Young.100** 254

Hammam. 256

Seat. 270

Steam generator cleaner. 271

Technical drawings. 272

Machine Translated by Google

Acrilan. 4

Maxxcoat 8

Baths for 2 people
- **Queen.** 12
- **Princess.** 16
- **Tango.** 20
- **Olympia.** 24
- **Lona.** 28

Premium hydromassage systems. 32

Panels. 38

Free-standing bathtubs
- **Evelyn.Gloss** 44
- **Evelyn.Matte** 46
- **Evelyn.Solid Surface** 48
- **Ithaki.** 50

Circular baths
- **Coral.** 56
- **Miami.** 58

Substitute baths
- **Oval.180** 64
- **Oval.190** 66
- **Style.** 68
- **Eliza.** 72

Straight baths
- **Evita.** 78
- **Duoline.** 80
- **Mocca Line.** 84
- **Celine.** 88
- **Zira.** 92
- **Sine.** 96
- **Sunshine.** 100
- **Zeta.** 104
- **Style.** 108
- **Althea.** 110
- **Kyveli.** 112
- **Thassos.** 114
- **Skiathos.** 116
- **iOS.** 118
- **Dilos.** 122
- **Oval.180** 124
- **Oval.190** 126
- **Macedonia.** 128
- **Eliza.** 130
- **Kymi.** 132

Bath shelf. 134

Corner baths
- **Serifos.** 138
- **Diva.** 140
- **Isabel.** 142
- **Poseidon.** 146
- **Ikaria.** 148
- **Santorini.** 150
- **Mykonos.145** 152
- **Mykonos.125** 154
- **Mykonos.105** 156
- **Mykonos.90** 158

Asymmetric baths
- **Kochili.170** 162
- **Kochili.160** 164
- **Kochili.153** 166
- **Kochili.145** 168
- **Kochili.135** 170
- **Kochili.125** 172

Pillows. 174

Economical baths
- **Minimal.** 178
- **Star Line Classic.** 180
- **Star Line.155** 182
- **Star Line.125** 184

Valves. 186

Batteries. 192

Hydrotherapy. 202

Cleaning & Disinfection. 210

Installation & Repair. 216

Showers. 222

Grills. 230

Shower Box
- **Young.140** 250
- **Young.120** 252
- **Young.100** 254

Hammam. 256

Seat. 270

Steam generator cleaner. 271

Technical data. 272

Machine Translated by Google

WATER EXPERIENCE

With over 40 years of experience, at ACRILAN we always aim for new innovative products that can improve the daily lifestyle and offer moments of relaxation and well-being, transforming water into a means of well-being.

With more than 40 years of experience, we at ACRILAN always aim at innovative new products that can improve daily life and offer moments of relaxation and wellness, transforming water into a source of well-being.

Machine Translated by Google

ACRILAN is the first Greek company to manufacture acrylic bathtubs in 1982. The production took place entirely in our factory's own facilities (40,000 sq.m. and 6,000 sq.m.) in Chalkidona, Thessaloniki, which marks the operation of her until today. From its first steps, ACRILAN, as a pioneer in the Greek area, shows an upward trend in the estimation of customers and rightfully today it is in the first positions in the field of production and distribution of sanitary ware. From the first moment ACRILAN, with its unique philosophy, stood out thanks to the design of its products but also the stable relationship between the price and the quality it offers to the customer. At ACRILAN, we dedicate all our know-how to the conversion (transformation) of water as a means of relaxation and well-being. ACRILAN for the production of its products uses cast acrylic, which is characterized by its antibacterial properties, which meet all the specifications set by the norms of the European Union (EN14516, EN232, EN12764 and EN14527), having all the necessary certifications.

ACRILAN SA is the first Greek company that manufactured acrylic bathtubs in 1982. The production has been taken place entirely in our factory (40,000m2 and 6,000m2 housed spaces) in Chalkidona Thessaloniki. In ACRILAN we devote all our experience and our inspiration in the transformation of water in a medium of relaxation and well-being. Our products are enjoying an affordable proposal in which form and function coexist harmoniously. ACRILAN uses acrylic sheet, which covers all the standards and requirements set by the EU. The European Regulation Standards, applying the standards EN14516, EN232, EN12764 and EN14527, determine the properties required of cast acrylic sheets for the manufacture of shower and tub, as well as finished products for sale. The structure of the color, thickness, stiffness, no absorption, the resistance to impact, the hot water and the cleaning products are some of the properties listed and required in the above specifications.

Machine Translated by Google

our values.
our values

Support
Support

We support our customers, using experience and deep knowledge of materials, to successfully implement their ideas.

We support our customers to realize their concepts, using our experience and depth knowledge of the materials.

Top Materials
Top materials

Cooperation with leading partners guarantees the selection of the right raw materials and components in every project.

Collaboration with top partners ensures the choice of the appropriate materials and peripherals for each project

Machine Translated by Google

Environmental responsibility

Environmental responsibility

From the idea to the final approval of the plans, we follow a holistic approach to the life cycle of our products, at every step of the production process. We try and achieve that our ecological footprint is as small as possible and for this, our company implements clean production process strategies.

From the idea to the final approval of the plans, we follow a holistic approach to the life cycle of our products, at every step of the production process. We try and achieve that our ecological footprint is as small as possible and for this, our company implements clean production process strategies.

Adaptability

Customization

We can customize our models to suit the customer's needs at minimal cost and without compromising on quality. ACRILAN makes sure to constantly adapt its product range to market trends, ensuring that our customer will receive a quality product that meets their expectations.

We can customize our models, in order to fit the customers' needs, with minimum cost and without any quality compromise.

After Sales Services

After Sales Services

We support our customers even after the sale of the product, offering the know-how we have in order to maintain our products at high quality levels. At ACRILAN, we deeply believe that we have a responsibility to everyone who uses our products and must meet their expectations over time.

The most important material is the creativity and love of our people for their work. Our company is always at the service of its customers with its specialized staff. In ACRILAN we share the company's vision and mission effectively, implementing the high goals we set, through systematic work. Staffing all departments with the right people ensures excellent service to our partners.

We support our clientele after product sales, using our expertise, to ensure that the high quality level of our products is maintained. At ACRILAN we deeply believe that we are responsible to everyone who uses our products and it is our duty to respond to their expectations through time. Our most important ingredients are creativity and the love for our work. The right people hold the right posts in all company departments to ensure excellent service to our associates and we are always at the service of our clients through our specialized staff members. At ACRILAN we effectively share the coprorate vision and mission, reflected in achieving the high targets we set through systematically consistent work.

IN LINE WITH THE ENVIRONMENT

Machine Translated by Google

acrilan

MAXXcoat®

maximum durability

Acrilan, as a pioneer manufacturer of acrylic bathtubs, combines the knowledge of science with many years of experience and modern technology, standing out for the reliability and quality of its products. Through this constant effort, we present to you the Maxx Coat strengthening technique which guarantees:

- absolute rigidity
- robustness
- strong durability
- maximum thermal insulation
- enhanced sound insulation
- keeping hot water for a longer period of time
- preservation of original acrylic shine
- unchanged stability over time
- moisture resistance
- waterproofness

Available on certain models for extra reinforcement.

Acrilan SA, being a pioneer manufacturer of acrylic bathtubs in Greece, combines the scientific knowledge with modern technology & its vast experience while its products stand out for their reliability and top quality. Through this constant effort, we hereby present you the new Maxx Coat reinforcement technique which guarantees the following:

- total rigidity (non-crack)
- solidity
- strong durability
- maximum thermal insulation
- reinforced soundproofing
- keeping water hot for a longer time
- maintaining the original acrylic shine
- invariable stability over time
- resistance to humidity
- waterproofness

Maxx Coat is available in certain product designs for extra reinforcement.

Machine Translated by Google

multi-**layer** construction

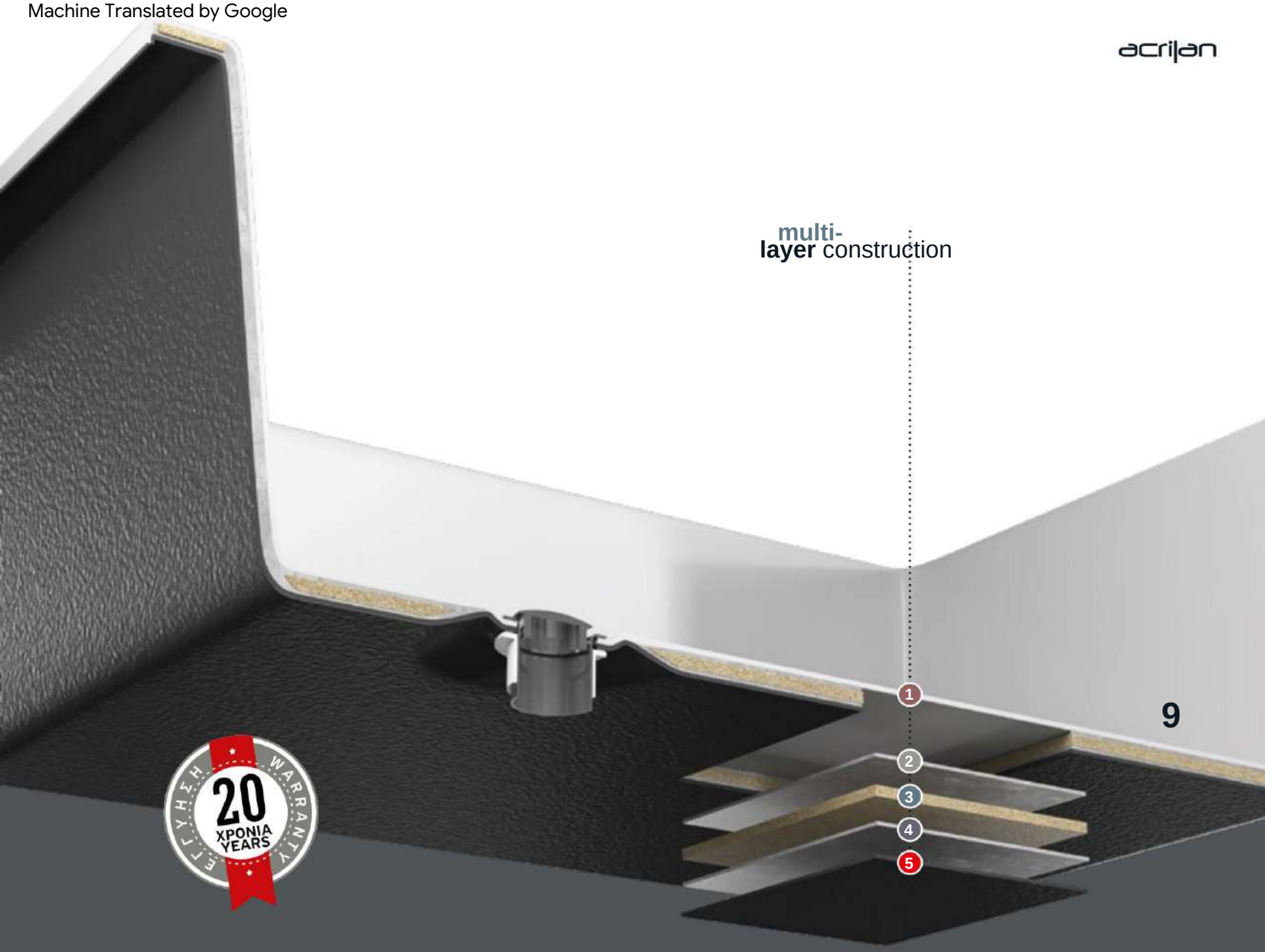

1. 4mm acrylic with 100% antibacterial surface *4mm acrylic with 100% antibacterial surface*
2. Reinforcement layer of polyester resin and fiberglass *Layer of polyester resin and fiberglass reinforcement*
3. Extra bottom reinforcement with fully integrated 18mm wood *Extra bottom reinforcement with fully integrated 18mm wood*
4. Reinforcement layer of polyester resin and fiberglass *Layer of polyester resin and fiberglass reinforcement*
5. Maxx Coat Reinforcement Finish *Maxx Coat Reinforcement Finish*

Machine Translated by Google

PREMIUM

acrilan

two people, *indoor*

two person *indoor bathtubs*

A paradise of relaxation and harmony. Contemporary design bathtubs that dominate the space.

A heaven of relaxation and harmony. Modern design bathtubs that dominate your bathroom.

Machine Translated by Google

Machine Translated by Google

Machine Translated by Google

acrilan

Queen.

13

An important presence in the bathroom.
Rectangular bathtub, of high aesthetics and special design.

An impressive bathtub in your bathroom.
A stylish rectangular bathtub with unique design.

Machine Translated by Google

Machine Translated by Google

Queen.

2.15x1.60m

W 1 2 3 4 5 6

15

274

CHARACTERISTICS

SPECIFICATIONS:

Dimensions **2.15 x 1.60m**

Capacity / Capacity **710Lt**

Material / Material	**Cast Acrylic / Cast Acrylic**	
Category / Category	**Standard**	03427
	MAXX coat	04435
	Velor Matte	04757
	Velor Matte MAXX Coat	06196
Color / Color	**White/White Gloss (standard)W** **Velor: Beige1 , Black2, Anthracite Grey3 , White4 , Light Gray5** **Pearlescent: Alba6**	

The product is only available in combination with the following systems.
This product is only available in combination with the following systems:

Pneumatic No2 Hydro Queen Premium Pneumatic No2	06205
Hydro+Aero Queen Premium Electronic Touch Hydro Queen	06378
Premium Electronic Touch Hydro-Aero Queen Premium	06206
Aeromassage Queen Premium	06207
	04259

OPTIONAL OPTIONS

OPTIONAL:

Front Aprons Front Panels	**Alfapanel 215**	06208
	Acrylic Panel White Gloss / **Acrylic Panel** White Gloss **215**	06510
	Acrylic Panel Velor Matte / **Acrylic Panel** Velor Matte **215**	06511
Side aprons Side Panels	**Alfapanel 160**	06209
	Acrylic Panel White Gloss / **Acrylic Panel** White Gloss **160**	06512
	Acrylic Panel Velor Matte / **Acrylic Panel** Velor Matte **160**	06513
Pillows	**QUADRA white/white**	04638
Pillows	**QUADRA black/black**	03601
Material / Material	Polyurethane / Polyurethane	

Select a faucet from the FAUCETS category

Machine Translated by Google

Machine Translated by Google

acrilan

Princess.

17

Bathtub of modern design & minimal aesthetics.
The comfortable interior welcomes the
body into a luxurious experience.

A bathtub of modern minimalistic design. Its ample interior space welcomes your body into a luxurious experience.

Machine Translated by Google

Machine Translated by Google

Princess.

1.65x1.65m

W 1 2 3 4 5 6

CHARACTERISTICS

SPECIFICATIONS:

Dimensions **1.65x1.65m**		
Capacity / Capacity **670Lt**		
Material / Material	**Cast Acrylic / Cast Acrylic**	
Category / Category	**Standard**	03426
	MAXX coat	04381
	Velor Matte	04758
	Velor Matte MAXX Coat	06197
Color / Color	**White/White Gloss (standard)W**	
	Velor: Beige1 , Black2, Anthracite Grey3 , White4, Light Gray5	
	Pearlescent: Alba6	

274

The product is only available in combination with the following systems.
This product is only available in combination with the following systems:

Pneumatic No2 Hydro Princess Premium Pneumatic No2	06572
Hydro+Aero Princess Premium Electronic/Electronic Touch	06577
Hydro Princess Premium Electronic/Electronic Touch Hydro-	06582
Aero Princess Premium Aeromassage/Aeromassage Princess	06587
Premium	06567

OPTIONAL OPTIONS

OPTIONAL:

Aprons	**Alfapanel 165**	06379
Panels	**Acrylic Panel** White Gloss / **Acrylic Panel** White Gloss **165**	06514
	Acrylic Panel Velor Matte / **Acrylic Panel** Velor Matte **165**	06515
Pillows	**QUADRA white/white**	04638
Pillows	**QUADRA black/black**	03601
Material / Material	Polyurethane / Polyurethane	

Select a faucet from the FAUCETS category

Machine Translated by Google

Machine Translated by Google

acrilan

Tango.

Rectangular bathtub, of high aesthetics and special design.

A rectangular bathtub of unique aesthetics & special design.

Machine Translated by Google

Machine Translated by Google

Tango.

1.90x1.60m | 1.85x1.20m

W 1 2 3 4 5 6

CHARACTERISTICS

SPECIFICATIONS:

Dimensions / **Dimensions1.90x1.60m | 1.85x1.20m**

Capacity / Capacity550 / **410 Lt**

Material / Material **Cast Acrylic / Cast Acrylic**

		190	185
Category / Category	**Standard**	06178	04396
	MAXX coat	06204	04831
	Velor Matte	06179	04797
	Velor Matte MAXX Coat	06203	06198

Color / Color **White/White Gloss (standard)W**
Velor: Beige1 , Black2, Anthracite Grey3 , White4 , Light Gray5
Pearlescent: Alba6

The product is only available in combination with the following systems.
This product is only available in combination with the following systems:

	190	185
Pneumatic No2 Hydro Tango Premium Pneumatic No2	06573	06574
Hydro+Aero Tango Premium 06578 **Electronic Touch Hydro Tango Premium**		06579
Electronic Touch Hydro-Aero Tango Premium 06588	06583	06584
Aeromassage Tango Premium		06589
	06568	06571

OPTIONAL OPTIONS

OPTIONAL:

		190	185
Front Aprons	**Alfapanel**	06221	06214
Front Panels	**Acrylic Panel** White Gloss / **Acrylic Panel** White Gloss 06522 **Acrylic Panel** Velor Matte / **Acrylic Panel** Velor Matte 06525 **160** 06209		06524 06526
			120
Side aprons Side Panels	**Alfapanel**		06215
	Acrylic Panel White Gloss / **Acrylic Panel** White Gloss **Acrylic Panel** Velor Matte / **Acrylic Panel** Velor Matte 06513	06512	06520 06521

Select a faucet from the FAUCETS category

274

Machine Translated by Google

Machine Translated by Google

acrilan

Olympia.

The elegant lines are the star of this special bathtub, which perfectly combines ergonomics with excellent aesthetics. Acrylic top in the color of the bathtub.

Sleek lines are the main characteristic of this unique bathtub which perfectly combines ergonomic features with excellent aesthetics. Acrylic top in the color of the bathtub.

Machine Translated by Google

Machine Translated by Google

Olympia.

2.00x1.40m

W 1 2 3 4 5 6

27

CHARACTERISTICS

SPECIFICATIONS:

Dimensions **2.00x1.40m**

Capacity / Capacity **700 Lt**

Material / Material	**Cast Acrylic / Cast Acrylic**	
Category / Category	**Standard**	04986
	MAXX coat	06199
	Velor Matte	06200
	Velor Matte MAXX Coat	06201
Color / Color	**White/White Gloss (standard)W**	
	Velor: Beige1 , Black2, Anthracite Grey3 , White4 , Light Gray5	
	Pearlescent: Alba6	

The product is only available in combination with the following systems.
This product is only available in combination with the following systems:

Pneumatic No2 Hydro Olympia Premium Pneumatic No2	06575
Hydro+Aero Olympia Premium 06580	
Electronic/Electronic Touch Hydro Olympia Premium	06585
Electronic/Electronic Touch Hydro-Aero Olympia Premium 06590	
Aeromassage Olympia Premium	06569

275

OPTIONAL OPTIONS

OPTIONAL:

Possibility of installation **of color therapy** (choose from LIGHTING SYSTEMS).
Possibility to install **color therapy system** (choose from the LIGHTING SYSTEMS CATEGORY).

Olympia filtration and recycling system to save water. 06380
Olympia filtration and recycling system in order to save water.

Front Aprons	**Alfapanel 200**	06216
Front Panels	**Acrylic Panel** White Gloss / **Acrylic Panel** White Gloss **200**	06516
	Acrylic Panel Velor Matte / **Acrylic Panel** Velor Matte **200**	06517
Side aprons	**Alfapanel 140**	06217
Side Panels	**Acrylic Panel** White Gloss / **Acrylic Panel** White Gloss **140**	06518
	Acrylic Panel Velor Matte / **Acrylic Panel** Velor Matte **140**	06519
Pillows	**QUADRA white/white**	04638
Pillows	**QUADRA black/black**	03601
Material / Material	Polyurethane / Polyurethane	

Machine Translated by Google

Machine Translated by Google

acrilan

Lona.

A paradise of relaxation & harmony. Contemporary design bathtub that dominates your personal space.

A heaven of relaxation and harmony. A modern design bathtub that dominates your bathroom.

Machine Translated by Google

Machine Translated by Google

Lona.

2. 0 0 x 1 · 4 0 m | 2. 0 0 x 1 . 20 m

CHARACTERISTICS

SPECIFICATIONS:

Dimensions / Dimensions **2.00x1.40m | 2.00x1.20m**

Capacity / Capacity **480 / 420 Lt**

Material / Material **Cast Acrylic / Cast Acrylic**

		140	120
Category / Category	**Standard**	05680	03922
	MAXX coat	05422	04315
	Velor Matte	05140	04436
	Velor Matte MAXX Coat	06354	06202

Color / Color **White/White Gloss (standard)W**
Velor: Beige1 , Black2, Anthracite Grey3 , White4 , Light Gray5
Pearlescent: Alba6

The product is only available in combination with the following systems.
This product is only available in combination with the following systems:

	140	120
Pneumatic No2 Hydro Lona Premium Pneumatic No2	06614	06576
Hydro+Aero Lona Premium 06615 **Electronic Touch Hydro Lona**		06581
Premium 06616 **Electronic Touch Hydro-Aero Lona Premium** 06617		06586
Aeromassage Lona Premium 06613		06591
		06570

275

OPTIONAL OPTIONS

OPTIONAL:

Front Aprons **Alfapanel 200** 06216

Front panel **Acrylic Panel** White Gloss / **Acrylic Panel** White Gloss **200** 06516
Acrylic Panel Velor Matte / Acrylic Panel Velor Matte **200** 06517

Alfapanel side skirts

		140	120
Side Panels	**Acrylic Panel** White Gloss / **Acrylic Panel** White Gloss	06217	06215
	Acrylic Panel Velor Matte / **Acrylic Panel** Velor Matte	06518	06520
		06519	06521

Select a faucet from the FAUCETS category

Machine Translated by Google

Machine Translated by Google

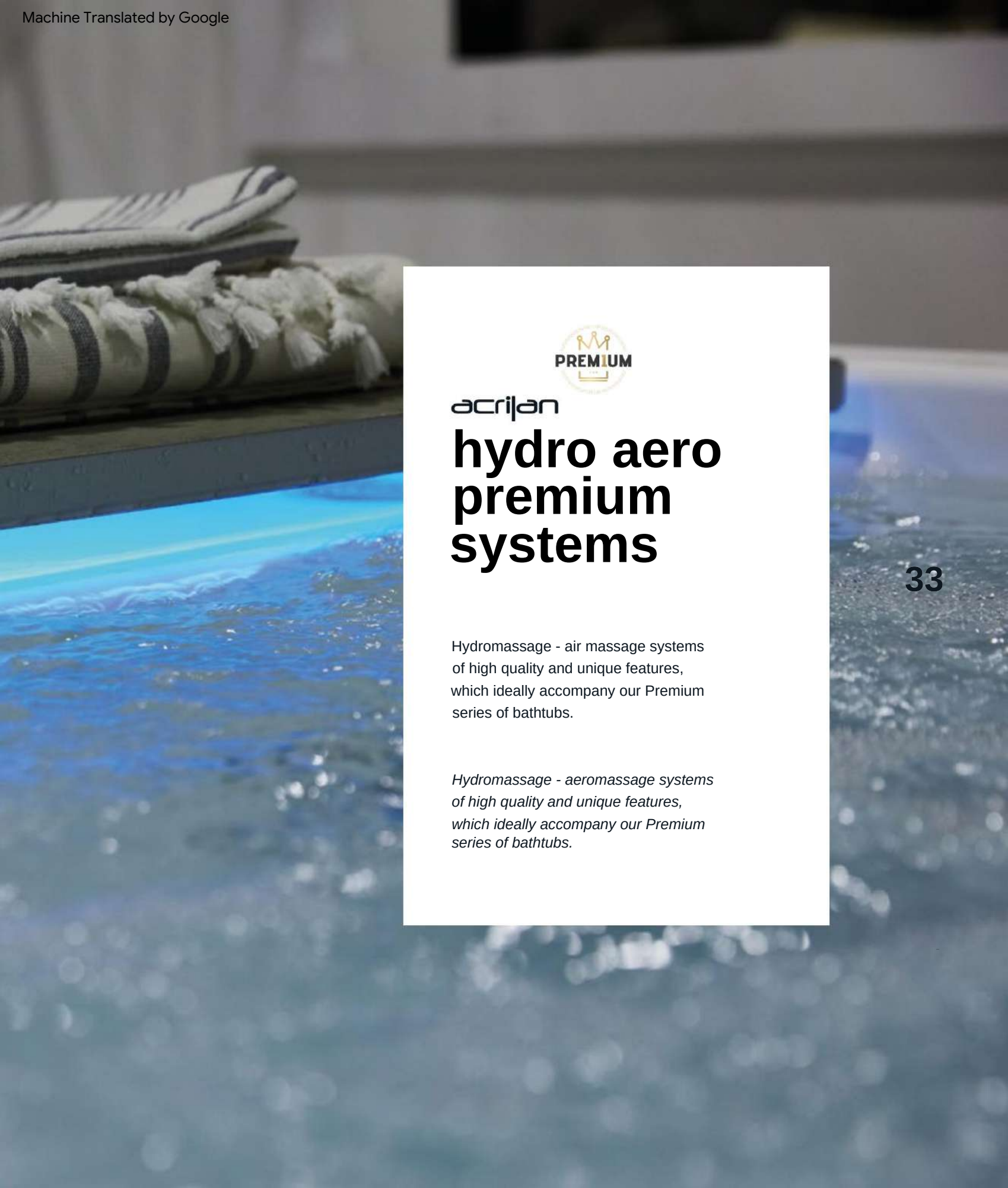

PREMIUM

acrilan

hydro aero premium systems

Hydromassage - air massage systems of high quality and unique features, which ideally accompany our Premium series of bathtubs.

Hydromassage - aeromassage systems of high quality and unique features, which ideally accompany our Premium series of bathtubs.

Machine Translated by Google

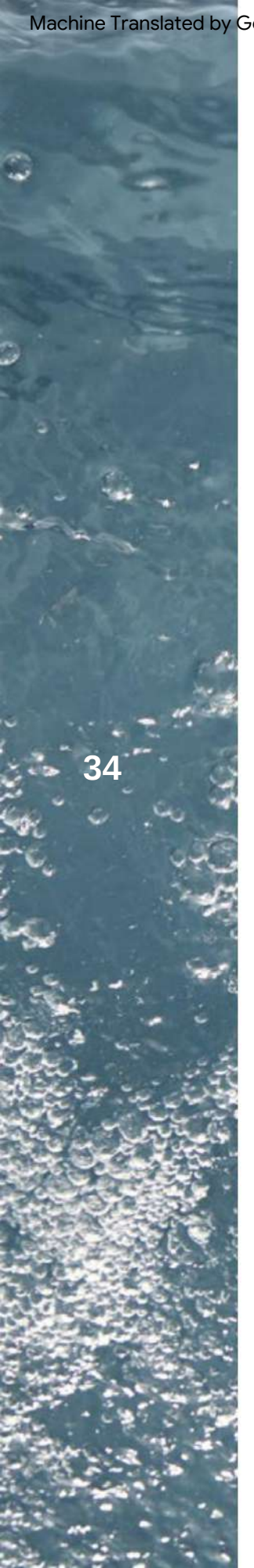

acrilan

Pneumatic No2 Premium Hydro.

No2 Premium Hydro-pneumatic system

- 1 air button extra slim with the possibility of being placed on the vertical side
  1 extra slim air button that can be placed on the vertical side
- 2 air control extra slim with the possibility of being placed on the vertical side
  2 extra slim air control panels that can be installed on the vertical side
- 10 adjustable water-air Slim Jets CLENDA ø65mm, combination of 2 groups
  10 adjustable slim air-water jets CLENDA ø 65mm, combination of 2 groups
- Extra slim suction with safety valve
  extra slim suction with a safety valve
- 1.5HP pump, CLASS IP X5
  pump 1.5 HP, CLASS IP X5
- Anti-vibration pump safety system
  anti-vibration pump system
- *Pump drainage* system
- Automatic drainage valve, connected to the pump for complete drainage
  automatic drain valve connected to the pump for full drainage
- Wiring and safety panel
  wiring and safety panel
- Automatic thermal switch for 20” pause
  automatic thermal switch for 20” pause
- Water level sensor
  Water level sensor
- Cleaning system with disinfection tablets
  cleaning system with disinfectant tablets
- Disinfection tablets
  disinfectant tablets
- Reinforced perimeter base
  reinforced perimeter base
- Wall mounting angles
  wall mount angle brackets

acrilan

Premium pneumatic air massage.

Premium pneumatic Aeromassage system

- Blower with anti-vibration feet 1050W (750w blower + 300w air heater)
  1050w blower with anti-vibration feet (750w blower & 300w air heater)
- 12-16 air massage jets if n dimension of the bathtub allows it
  12-16 aeromassage jets if the bathtub dimensions allow their installation
- Wiring and safety panel
  wiring and safety panel
- 1 air button extra slim with the possibility of being placed on the vertical side
  1 extra slim air button that can be placed on the vertical side
- Reinforced perimeter base
  reinforced perimeter base
- Wall mounting angles
  wall mount angle brackets

Machine Translated by Google

acrilan

No2 Premium Hydro-Aero Pneumatic.

No2 Premium pneumatic Hydro + Aeromassage system

It consists of the combination of the pneumatic No2 Premium HYDRO, with the pneumatic Premium Aeromassage, (ignore elements that are repeated in both systems).

It consists of the combination of the pneumatic No2 Premium HYDRO, with the Premium pneumatic Aeromassage, (ignore elements that are repeated in both systems).

The following jets are fitted to all Premium pneumatic and electronic systems.

The following jets are installed to all Premium pneumatic and electronic systems.

CLENDA SLIM

CENTRO High-performance air-water mixing jet of adjustable direction, with a removable coating of 65mm diameter.
High-performance air-water mixing jet of adjustable direction, with a removable cover of 65mm diameter.

CLENDA SLIM

SWIRL Rotating hydrotherapy jets designed to offer pulsating massage with a removable cover of 65mm diameter.
Rotary hydrotherapy jets designed to offer pulsating massage with a removable cover of 65mm diameter.

Optional Placement

Optional Installation

MICRO JET

Mini jets designed to offer intense hydromassage on shoulders and back. In the case of Micro Jet installation, the total number of Jets is 12 (6 slim and 6 micro).

Mini jets designed to offer an intense hydromassage to shoulders and back.
In the case of Micro Jet installation, the total number of Jets is 12 (6 slim ones and 6 micro ones).

LIGHTING

Color therapy system with 1 LED projector **04494**
Color therapy system with 1 LED projector
Color therapy system with 2 LED projectors **06650**
Color therapy system with 2 LED projectors

Includes / Equipped with:

- LED color therapy with 11 color changes
  LED color therapy system with 11 available colors
- automatic color switching
  automatic color change
- digital control
  digital controller
- wiring and security panel
  wiring and safety panel

Machine Translated by Google

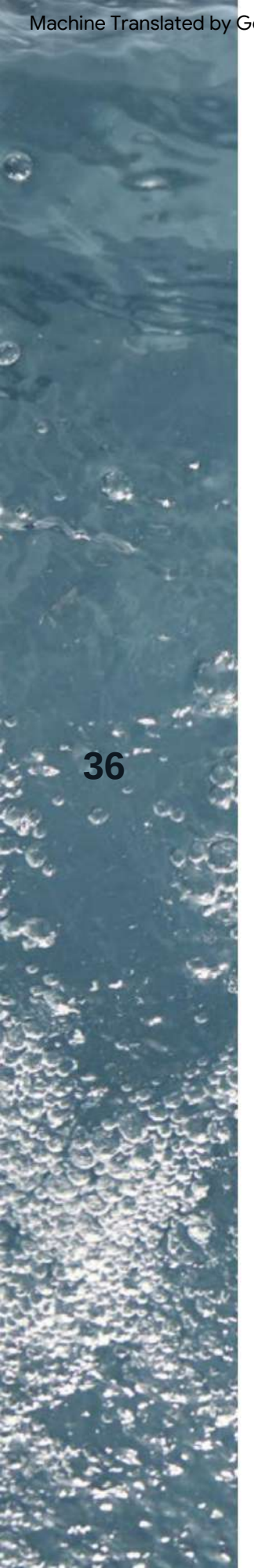

acrilan

Electronic Touch Hydro Premium.

Premium Touch Hydro electronic system

- Glass, digital, illuminated touch controller, 4 functions
  Digital, glass, illuminated touch panel, 4-functions
- Increased air supply, with electric valve
  air supply fluctuation with an electric valve
- 10 adjustable water-air Slim Jets CLENDA ø65mm, combination of 2 groups
  10 adjustable slim air-water jets CLENDA ø 65mm, combination of 2 groups
- Extra slim suction with safety valve
  extra slim suction with a safety valve
- 1.5HP pump, CLASS IP X5
  pump 1.5 HP, CLASS IP X5
- Anti-vibration pump safety system
  anti-vibration pump system
- *Pump drainage* system
- Automatic drainage valve, connected to the pump for complete drainage
  automatic drain valve connected to the pump for full drainage

Wiring and safety panel

wiring and safety panel

- Automatic thermal switch for 30” pause
  automatic thermal switch for 30” pause
- Water level sensor
  Water level sensor
- LED color therapy with 11 color changes
  LED color therapy with 11 color changes
- Electronic cleaning system with digital display
  electronic cleaning system, with digital display
- Disinfectant liquid
  disinfectant liquid
- Reinforced perimeter base
  reinforced perimeter base

acrilan

Electronic Touch Hydro-Aero Premium.

Premium Touch Hydro electronic system

It consists of the full Touch Hydro Premium electronic system, combined with the following Aeromassage elements .

- Blower with anti-vibration feet 1050W (750W blower + 300W air heater)
  1050W blower with anti-vibration feet (750W blower & 300W air heater)
- 12-16 air massage jets if n bather dimension allows it
  12-16 aeromassage jets if the bathtub dimensions allow their installation

Machine Translated by Google

Machine Translated by Google

acrilan

acrylics/acrylics panels.

Their refined, velvety and matte texture offers the luxurious look and feel of natural stone, accompanied by all the advantages and high performance of an acrylic material. This innovative material stands out for its elegance and creates an innovative product category while satisfying the needs of the end consumer through the offered matte color options.

Their refined, velvety and matte appearance offers the luxurious look and feel of a natural stone, accompanied by all the advantages and high performance of an acrylic material. This material undoubtedly evokes the interest of experts in decoration, such as interior designers, architects and of course consumers, with its modern appearance, while maintaining all those advantages offered by a cellular material of molded acrylic. This innovative material stands out for its elegance and creates a unique product category while meeting the needs of the end consumer through the matte color options offered.

WHITE GLOSS

VELOR MATTE WHITE

VELOR MATTE LIGHT GRAY

VELOR MATTE GRAY

VELOR MATTE BEIGE

VELOR MATTE BLACK

Machine Translated by Google

Alfapanel.

Composite panel consisting of a core of expanded, foamed PVC with a density of 0.55gr/cm3 , covered with a 0.5mm thick PVC sheet in various colors and finishes.

PVC sandwich panel consisting of an extruded PVC foam core with a density of 0.55gr/ cm3 , covered with a 0.5mm thick PVC sheet in different colors and finishes.

COLORS & FINISHES:

PANEL PROPERTIES:

Resistant to high temperatures
Heat resistant

Recyclable
Recyclable

Self extinguishing
Self-extinguishing

Antibacterial
Antibacterial

Anti-mold
Anti-mould

Machine Translated by Google

acrilan

WPC 3D panels.

coffee.

Composite panels with 3D slats. Made of wood, recycled resin, HDPE and UV stabilizers, the panels are extremely durable, long-lasting, waterproof, anti-mould and resistant to solar radiation. They touch each other without showing the joint.

Synthetic panels with 3D slats. Made of wood, recycled resin, HDPE and UV stabilizers, the panels are extremely durable, with a long life, waterproof, anti-mold and resistance to solar radiation. They are joined together without exposing the joint.

Machine Translated by Google

teak.

antique.

grey.

Machine Translated by Google

acrilan

free *placement*

free standing *bathtubs*

Free-standing bathtubs add refined luxury to the space and bring pleasure to our everyday life.

Our free-standing bathtubs add refined luxury to your bathroom and bring pleasure to your everyday routine.

Machine Translated by Google

Machine Translated by Google

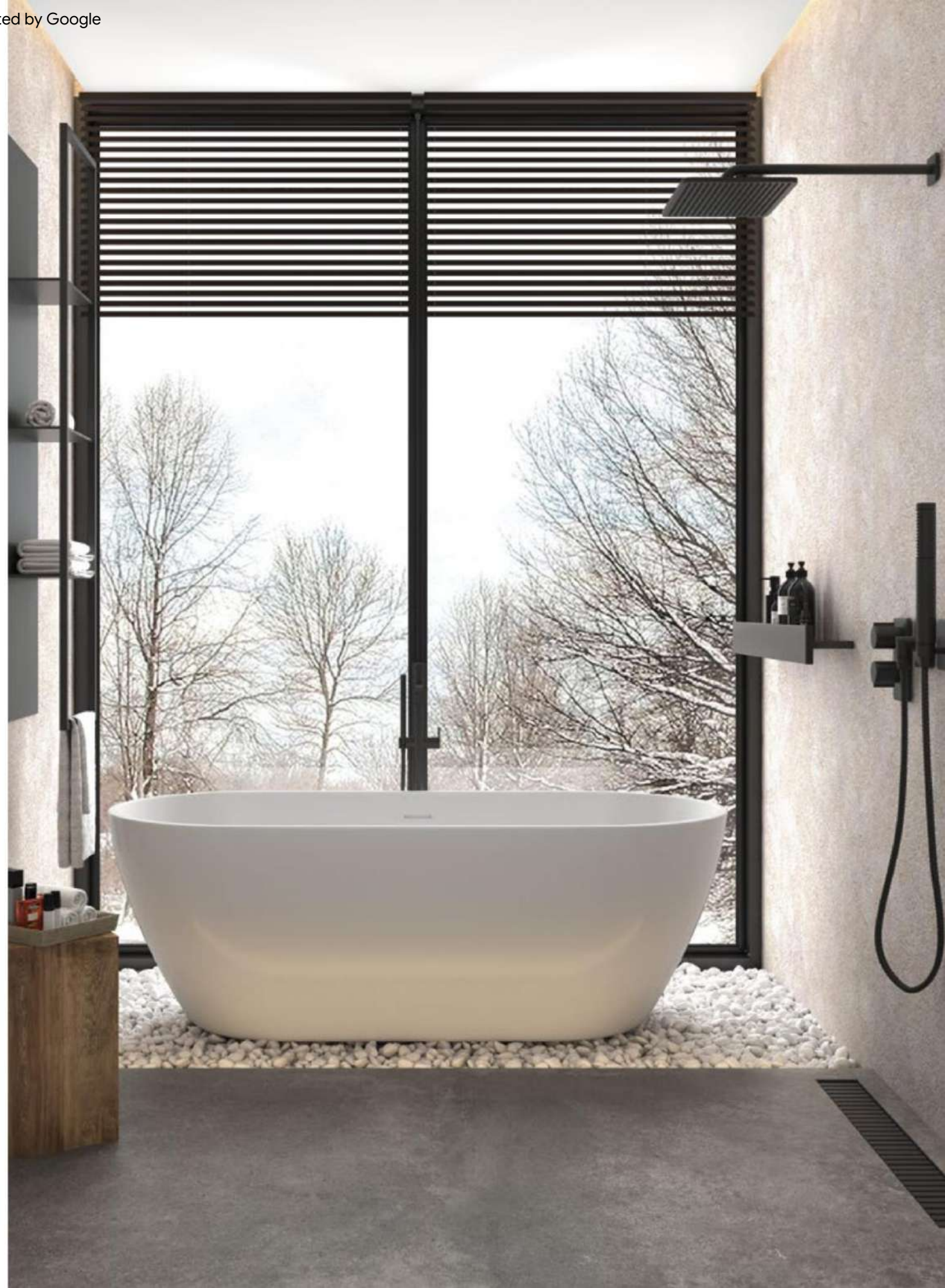

Machine Translated by Google

acrilan

Evelyn. Gloss

1.65x0.80m

Free-standing bathtub with built-in apron & chrome Pop up valve, oval design.

A freestanding oval bathtub with integrated apron panel and pop-up chrome valve.

W

276

CHARACTERISTICS

SPECIFICATIONS:

Dimensions / Dimensions	**1.65 x 0.80m**
Capacity / Capacity	**280Lt**
Material / Material	**Acrylic / Acrylic**
Category / Category	**Standard** 04552 + Tilt-adjustable base. Tilt-adjustable base. * Concealed overflow valve included. Concealed overflow valve included.
Color / Color	**White/White Gloss (standard)W**

OPTIONAL OPTIONS

OPTIONAL:

Stainless steel base stabilization set Stainless steel base fixing set	05891

Select a faucet from the FAUCETS category

Machine Translated by Google

Machine Translated by Google

acrilan

Evelyn.
Matt

1.65x0.80m

Free-standing bathtub with built-in apron & Pop up valve black or gray, oval design.

Freestanding oval bathtub with integrated apron panel and pop-up chrome valve in black or gray color.

1

2

47

276

CHARACTERISTICS
SPECIFICATIONS:

Dimensions / Dimensions	**1.65 x 0.80m**
Capacity / Capacity	**280Lt**
Material / Material	**Acrylic / Acrylic**
Category / Category	**Standard** 04552 + Tilt-adjustable base. Tilt-adjustable base. * Concealed overflow valve included. Concealed overflow valve included.
Color / Color	**Black/Black Matte1** 05811 **Gray/Grey Matte2** 05865 **Telegrau 2 (RAL 7046)**

OPTIONAL OPTIONS
OPTIONAL:

Stainless steel base stabilization set Stainless steel base fixing set	05891

Select a faucet from the FAUCETS category

Machine Translated by Google

Machine Translated by Google

acrilan

Evelyn.
Solid Surface

1.70x0.80m

Free-standing bathtub with built-in apron & solid surface valve, oval design.
A freestanding oval bathtub with integrated apron panel and solid surface pop-up valve.

49

276

CHARACTERISTICS

SPECIFICATIONS:

Dimensions / Dimensions	**1.70 x 0.80m**
Capacity / Capacity	**305Lt**
Material / Material	**Solid Surface**
Category / Category	**Standard** 04965
Color / Color	**White/White Solid MatteS**

OPTIONAL OPTIONS

OPTIONAL:

Select a faucet from the FAUCETS category

Machine Translated by Google

Machine Translated by Google

acrilan

Ithaki.

51

Retro style free-standing bathtub with visible valve.

A freestanding bathtub in a retro style with a visible valve.

Machine Translated by Google

1

2

Machine Translated by Google

Ithaki.

1.75 x 0.80m

W

CHARACTERISTICS

SPECIFICATIONS:

Dimensions **1.75 x 0.80m**

Capacity / Capacity **230Lt**

Material / Material **Acrylic / Acrylic**

Category / Category **Standard**

Chrome legs & valve Gold legs & valve Gold legs & valve Bronze legs & valve White legs & chrome valve * With Tilt-adjustment capability .

04395
06599
06600
06633

Color / Color **White/White Gloss (standard)W**

OPTIONAL OPTIONS

OPTIONAL:

275

1. Retro Floor Faucet Bruma Imperial **Chrome / Chrome** 06433
Floor-standing Bruma Imperial retro faucet **Gold Bronze** 06436 06437 **Chrome** 03224 **Gold Bronze** 01580

2. Ithaki Retro Valves 06118

3

3. Connection angles for Ithaca Valve **Chrome** 03225 **Gold** 06430
Angle connections for Ithaki valve **Bronze** 06431

4

4. Direct connections for Ithaca Valve 11cm **Chrome / Chrome** 06427 06428
11 cm straight connections for Ithaki valve **Gold Bronze** 06429

5. Siphon of Ithaca with visible connection **Chrome / Chrome** 05712
Visible connection Ithaki siphon **Gold** 06602 **Bronze** 05493

5

The bath tub is available externally painted in RAL colors. 06601
This bathtub can be painted externally in any RAL color.

Machine Translated by Google

acrilan

circular

circular *bathtubs*

The special shape of the circular bathtubs serves the needs of the elaborate style and manages to transform your bathroom into the center of attention.

The particular shape of the round bathtubs serves your needs for a special style and manages to get your bathroom into the center of everyone's attention.

Handmade Sisal Cladding

The company Acrilan presents an idea for the perimeter lining of circular bathtubs: the handmade braiding of sisal fibers. Sisal ropes are produced from the plant product sisal or, as it is otherwise referred to, “sisal hemp”. The fibers of the plant are durable with long durability, shaved and processed in a suitable way so that they do not cause problems during their use. Sisal is traditionally used as a raw material in rope making. At Acrilan, we knit it on a base, it is handmade, while its waterproofing and oil repellency are achieved by coating a special wax, thus effectively repelling water and oily stains. In addition, sisal resists moisture and microorganisms for a long time, thus increasing the lifespan of the bathtubs.

Acrilan SA presents an idea for the perimetric coating of the circular bathtubs: the handmade sisal rope. Sisal ropes are produced from the natural fiber sisal or, as it is also called, "sisal hemp". The fibers of the plant are strong with long durability, shaved and processed in a suitable way so that they do not cause any problems during their use. Sisal is traditionally used as a raw material in rope making. In our company, Acrilan SA, we knit it onto a base & it is handmade, while its waterproofing and oil repellency are achieved by a coating of a special wax, thus effectively repelling water and oily stains. In addition, sisal resists moisture and microorganisms for a very long time, thus increasing the lifespan of our bathtubs.

Machine Translated by Google

Machine Translated by Google

Machine Translated by Google

acrilan

Coral.

1.50x1.50m

W 1 2 3 4 5

A bathtub of modern design and ornate style with the possibility of converting it into a free-standing bathtub with the option of a handmade lining made of flax rope.

Bathtub of modern design and special style, being also convertible into a freestanding tub with the option of a handmade knitted cladding of flax rope.

CHARACTERISTICS

SPECIFICATIONS:

Dimensions / Dimensions	**1.50 x 1.50m**	
Capacity / Capacity	**385Lt**	
Material / Material	**Cast Acrylic / Cast Acrylic**	
Category / Category	**Standard**	03914
	MAXX coat	04634
	Velor Matte	04941
	Velor Matte MAXX Coat	06329
Color / Color	**White/White Gloss (standard)W Velor: Beige1 , Black2, Anthracite Grey3 , White4 , Light Gray5**	

57

276

OPTIONAL OPTIONS

OPTIONAL:

No. 1 Hydromassage / Hydromassage	06595
Perimetric flax coating / Perimetric flax coating Perimetric basket coating / Perimetric basket coating	04572 05522
Select a battery from the BATTERIES category Select a faucet from the FAUCETS category	
Choose a valve 81-125 cm long from the VALVES category. Choose a 81-125 cm valve, from the VALVES category.	

Linen knit
Flax knitting

Wicker basket
Basket knitting

Machine Translated by Google

Machine Translated by Google

acrilan

Miami.

A bathtub of modern design and ornate style with the possibility of converting it into a free-standing bathtub, with the option of a handmade basket lining.

Modern design and special style bathtub, being also convertible into a freestanding bathtub, with the option of a handmade basket coating.

Machine Translated by Google

Machine Translated by Google

Miami.

1.80 x 1.80m

W
1
2
3

CHARACTERISTICS

SPECIFICATIONS:

Dimensions / Dimensions	**1.80 x 1.80m**	
Capacity / Capacity	**510Lt**	
Material / Material	**Acrylic / Acrylic**	
Category / Category	**Standard**	02216
	MAXX coat	04631
	Velor Matte	05778
	Velor Matte MAXX Coat	06330
Color / Color	**White/White Gloss (standard)W**	
	Velor: Beige1 , White2 , Light Gray3	

276

OPTIONAL OPTIONS

OPTIONAL:

No. 2 Hydromassage / Hydromassage	00466
Basic Aeromassage / Aeromassage	00491
Touch Hydro Hydromassage / Hydromassage	05123
Touch Hydro-aero Hydromassage - Aeromassage / Hydromassage - Aeromassage	05124
Perimetric basket coating for converting the bathtub into a freestanding one	06154

Select a faucet from the FAUCETS category

Choose a 70-80 cm long valve from the VALVES category, hidden overflow.
Choose a 70-80 cm valve, from the VALVES category, with concealed overflow.

Machine Translated by Google

acrilan

subordinates

undermount *bathtubs*

The under-seated bathtubs
combine impeccable aesthetics,
non-negotiable elegance and
absolute harmony.

Undermount bathtubs combine excellent aesthetics, undisputed elegance and absolute harmony.

Machine Translated by Google

Machine Translated by Google

Machine Translated by Google

acrilan

Oval.

1.80x1.00m

An impressive bathtub that combines curves and minimal design.

An impressive bathtub that combines curves and minimal design.

CHARACTERISTICS

SPECIFICATIONS:

Dimensions / Dimensions	**1.80x1.00m**	
Capacity / Capacity	**340Lt**	
Material / Material	**Cast Acrylic / Cast Acrylic**	
Category / Category	**Standard**	06264
	MAXX coat	06265
	Velor Matte	06266
	Velor Matte MAXX Coat	06267
Color / Color	**White/White Gloss (standard)W** **Velor: Beige1 , Black2, Anthracite Grey3 , White4, Light Gray5**	

277

OPTIONAL OPTIONS

OPTIONAL:

No. 2 Hydromassage / Hydromassage 00466

Oval bathtub perimetric support base 06605

Choose a 70-80 cm long valve from the VALVES category
Choose a 70-80 cm valve, from the VALVES category

Machine Translated by Google

Machine Translated by Google

acrilan

Oval.

1.90x0.80m

An impressive bath tub that combines curves and minimal design.

An impressive bathtub that combines curves and minimal design.

CHARACTERISTICS

SPECIFICATIONS:

Dimensions / Dimensions	**1.90x0.80m**	
Capacity / Capacity	**200Lt**	
Material / Material	**Cast Acrylic / Cast Acrylic**	
Category / Category	**Standard**	06268
	MAXX coat	06269
	Velor Matte	06270
	Velor Matte MAXX Coat	06271
Color / Color	**White/White Gloss (standard)W**	
	Velor: Beige1 , Black2, Anthracite Grey3 , White4, Light Gray5	

277

OPTIONAL OPTIONS

OPTIONAL:

No. 2 Hydromassage / Hydromassage	00466
Oval bathtub perimetric support base	06605

Choose a 70-80 cm long valve from the VALVES category
Choose a 70-80 cm valve, from the VALVES category

Machine Translated by Google

Machine Translated by Google

acrilan

Style.

The Style bathtub meets the needs of special style & modern design.

The Style bathtub meets the requirements for a unique style coupled with modern design.

Machine Translated by Google

Machine Translated by Google

W
1
2
3
4
5

Style.

1.70 x 0.80m

CHARACTERISTICS

SPECIFICATIONS:

Dimensions / Dimensions	**1.70 x 0.80m**	
Capacity / Capacity	**250Lt**	
Material / Material	**Cast Acrylic / Cast Acrylic**	
Category / Category	**Standard**	04126
	MAXX coat	04656
	Velor Matte	06292
	Velor Matte MAXX Coat	06293
Color / Color	**White/White Gloss (standard)W**	
	Velor: Beige1 , Black2, Anthracite Grey3 , White4 , Light Gray5	

277

OPTIONAL OPTIONS

OPTIONAL:

No. 2 Hydromassage / Hydromassage 00466

Perimeter support base for straight underseated bathtubs 06606
Rectangular undermount bathtub perimetric support base
For installation with a marble or tile Top

Choose a 45-55 cm long valve from the VALVES category
Choose a 45-55 cm valve, from the VALVES category

Machine Translated by Google

Machine Translated by Google

acrilan

Eliza.

Luxury intertwined with simplicity create a new perspective on the bathroom space.

Luxury combined with simplicity create a new concept for your bathroom design.

Machine Translated by Google

Machine Translated by Google

W
1
2
3
4
5

Eliza.

1.70 x 0.70 | 1.60 x 0.65m

CHARACTERISTICS

SPECIFICATIONS:

Dimensions / Dimensions	**1.70 x 0.70m 1.60 x 0.65m**		
Capacity / Capacity	**160Lt** **150Lt**		
Material / Material	**Cast Acrylic / Cast Acrylic**		
		170	**160**
Category / Category	**Standard**	06635	05204
	MAXX coat	06636	05464
	Velor Matte	06637	06295
	Velor Matte MAXX Coat	06638	06296
Color / Color	**White/White Gloss (standard)W**		
	Velor: Beige1 , Black2, Anthracite Grey3 , White4 , Light Gray5		

75

277

OPTIONAL OPTIONS

OPTIONAL:

No. 2 Hydromassage / Hydromassage	00466	
Perimeter support base for straight underseated bathtubs Rectangular undermount bathtub perimetric support base For installation with a marble or tile Top		06606
Choose a 56-65 cm long valve from the VALVES category Choose a 56-65 cm valve, from the VALVES category + chrome pop up valve with rectangular overflow (crs) pop-up chrome valve with rectangular overflow (crs)		

Machine Translated by Google

Machine Translated by Google

acrilan

straight lines

rectangular *bathtubs*

Classic aesthetics blend with modern design. Simple lines and non-negotiable elegance in perfect harmony.

Classic aesthetics blend with contemporary design. Simple lines and undisputed elegance are combined in absolute harmony.

Machine Translated by Google

Machine Translated by Google

acrilan

Evita.

1.90x0.90m

A straight bathtub with a special design and oval finishes, with a valve in the center and two backs, forms the bathroom of your dreams.

A rectangular bathtub with special design and oval finishes, having a valve in the center and two backrests, that creates the bathroom of your dreams.

W 1 2 3 4 5

CHARACTERISTICS

SPECIFICATIONS:

Dimensions / Dimensions	**1.90 x 0.90m**	
Capacity / Capacity	**290Lt**	
Material / Material	**Cast Acrylic / Cast Acrylic**	
Category / Category	**Standard**	05566
	MAXX coat	06225
	Velor Matte	06226
	Velor Matte MAXX Coat	05951
Color / Color	**White/White Gloss (standard)W**	
	Velor: Beige1 , Black2, Anthracite Grey3 , White4 , Light Gray5	

278

OPTIONAL OPTIONS

OPTIONAL:

No. 2 Hydromassage / Hydromassage	00466
Basic Aeromassage / Aeromassage	00491
Touch Hydro Hydromassage / Hydromassage	05123
Touch Hydro-aero Hydromassage - Aeromassage / Hydromassage - Aeromassage	05124
Perimetric support base Support set	02495
	01540
In the case of free installation, it is available with braided linen	06596
In free standing option, it is available with perimetric flax coating	
Choose a 70-80 cm long valve from the VALVES category	
Choose a 70-80 cm valve, from the VALVES category	

Linen knit
Flax knitting

Machine Translated by Google

Machine Translated by Google

acrilan

Duoline.

Rectangular bathtub of high aesthetics and special design, with two backs and a comfortable interior.

A rectangular bathtub of modern aesthetics and special design, with two backrests and ample interior space.

Machine Translated by Google

Machine Translated by Google

Duoline.

1.80x1.00m | 1.80x1.20m

CHARACTERISTICS

SPECIFICATIONS:

Dimensions / Dimensions	**1.80x1.00m / 1.80x1.20m**		
Capacity / Capacity	**295 / 340Lt**		
Material / Material	**Cast Acrylic / Cast Acrylic**		
		100	**120**
Category / Category	**Standard**	04438	06412
	MAXX coat	04439	06413
	Velor Matte	06192	06414
	Velor Matte MAXX Coat	06222	06415
Color / Color	**White/White Gloss (standard)W** **Velor: Beige1 , Black2, Anthracite Grey3 , White4 , Light Gray5**		

278

OPTIONAL OPTIONS

OPTIONAL:

No. 2 Hydromassage / Hydromassage 00466
Basic Aeromassage / Aeromassage 00491
Touch Hydro Hydromassage / Hydromassage 05123
Touch Hydro-aero Hydromassage - Aeromassage / Hydromassage - Aeromassage 05124

Aprons / Panels	**Gloss Front / Front** 01184	
	Velor Front / Front 06223	
	ALPHAPANEL 180 06389	
	ALPHAPANEL 120 06215	
	ALPHAPANEL 100 06401	
Perimetric support base Support set		02495 01540

Select a faucet from the FAUCETS category

Choose a 45-55 cm long valve from the VALVES category
Choose a 45-55 cm valve, from the VALVES category

Machine Translated by Google

Machine Translated by Google

acrilan

Mocca Line.

Elegant lines take center stage in this special bathtub, which perfectly combines ergonomics with excellent aesthetics.

The sleek lines are the main characteristic of this unique bathtub which perfectly combines ergonomic features with excellent aesthetics.

Machine Translated by Google

Machine Translated by Google

Mocca Line.

1.70x0.80m | 1.60x0.80m
1.50x0.80m | 1.40x0.80m

W

CHARACTERISTICS

SPECIFICATIONS:

Dimensions & Category

	Standard MAXX coat			Standard MAXX coat	
1.70x0.80 06083		05361	**1.60x0.80**	06084	04912
1.50x0.80 06082		04923	**1.40x0.80**	05267	05247

Capacity 170x80: **200Lt** 160x80: **190Lt**
Capacity 150x80: **180Lt** 140x80: **170Lt**

Material **Cast Acrylic**

Color **White Gloss (standard)W**

OPTIONAL OPTIONS

OPTIONAL:

Eco basic Hydromassage / Hydromassage 00464
No. 1 Hydromassage / Hydromassage 00461
No. 2 Hydromassage / Hydromassage 00466
Basic Aeromassage / Aeromassage 00491
Hydromassage - aeromassage systems are available in dimensions 1.70 and 1.60
Hydromassage & aeromassage systems are available in 1.70 and 1.60 dimensions only

279

Front Aprons Front Panels	**Gloss 170**	01198	**Gloss 160**	01198
	Gloss 150	01198	**Gloss 140**	01198
	ALPHAPANEL 170	06397	**ALPHAPANEL 160**	06209
	ALPHAPANEL 150	06399	**ALPHAPANEL 140**	06217
Side aprons Side Panels	**Gloss 80**	04343	**ALPHAPANEL 80**	06403

Perimetric support base Support set 02494
01540

Handle set / Handle set **24.5cm** (2pcs.) 02460
Handle set / Handle set **16cm** (2pcs) 02461

Select a faucet from the FAUCETS category

Choose a 45-55 cm long valve from the VALVES category
Choose a 45-55 cm valve, from the VALVES category

Machine Translated by Google

Machine Translated by Google

acrilan

Celine.

Expressing a unique way of decoration, it stands out thanks to its ergonomic design and aesthetics.

By having a unique decoration, it stands out thanks to its ergonomic design and aesthetics.

Machine Translated by Google

90

acrilan

Machine Translated by Google

Celine.

1.80x0.85m

W 1 2 3 4 5

91

CHARACTERISTICS

SPECIFICATIONS:

Dimensions **1.80x0.85m**

Capacity / Capacity **265Lt**

Material / Material	**Cast Acrylic / Cast Acrylic**
Category / Category	**Standard** 04080 **MAXX coat** 04290 **Velor Matte** 04446 **Velor Matte MAXX Coat** 06276
Color / Color	**White/White Gloss (standard)W** **Velor: Beige1 , Black2, Anthracite Grey3 , White4 , Light Gray5**

OPTIONAL OPTIONS

OPTIONAL:

285

No. 1 Hydromassage / Hydromassage 00461
No. 2 Hydromassage 00466
Basic Aeromassage / Aeromassage 00491
Touch Hydro Hydromassage / Hydromassage 05123
Touch Hydro-aero Hydromassage - Aeromassage / Hydromassage - Aeromassage 05124

Front aprons Front Panels	**Gloss** 01184 **Velor** 06223 **ALPHAPANEL 180** 06389
Side aprons Side Panels	**Gloss** 04343 **Velor** 06283 **ALPHAPANEL 85** 06402

Perimetric support base / Perimetric support base 02495
Support set / Support set 01540

Select a faucet from the FAUCETS category

Choose a 45-55 cm long valve from the VALVES category
Choose a 45-55 cm valve, from the VALVES category

Machine Translated by Google

Machine Translated by Google

acrilan

Zira.

Approach to comfort & minimal aesthetics
that gives your bathroom an excellent
combination of superiority and functionality.

A combination of comfort & minimal aesthetics that gives your bathroom an excellent blend of superiority and functionality.

Machine Translated by Google

Machine Translated by Google

Zira.

.80x0.80m | 70x0.80m | 1170m | 75m .70x0.75m
1400x700m | 1600x700m 1500x700m |

CHARACTERISTICS

SPECIFICATIONS:

Dimensions & Category

	Standard	MAXX coat Velor Matte	Vel. Matte MAXX Coat	
1.80x0.80	04308	04266	05813	06255
1.70x0.80	05622	06188	05624	06256
1.70x0.75	04244	04278	05644	06257
1.70x0.70	04294	04318	05830	06258
1.60x0.75	04299	04311	05265	06259
1.60x0.70	05411	05412	06254	06260
1.50x0.70	04885	05252	06193	06261
1.40x0.70	04914	05160	05768	06262
1.30x0.70	05245	05227	05777	06263

Capacity 180x80: **230Lt** 170x80 : **200Lt 180x75 : 190Lt 170x70: 180Lt** 160x75 : **160Lt** 160x70: **155Lt**
150x70: **145Lt** 140x70: **130Lt** 130x70: **120Lt**

Material / Material — **Cast Acrylic / Cast Acrylic**

Color / Color — **White/White Gloss (standard)W, with non-slip bottom**
Velor: Beige1 , Black2, Anthracite Grey3 , White4 , Light Gray5

OPTIONAL OPTIONS

OPTIONAL:

Eco basic Hydromassage / Hydromassage	00464
No 1 Hydromassage / Hydromassage	00461
No 2 Hydromassage / Hydromassage	00466
Basic Aeromassage / Aeromassage	00491
Touch Hydro Hydromassage / Hydromassage	05123
Touch Hydro-aero Hydromassage - Aeromassage / Hydromassage - Aeromassage	05124

The hydromassage - aeromassage systems are available from the dimension 1.80x0.80 up to the dimension 1.60x0.70 Hydromassage & aeromassage systems are available in dimensions from 1.80x0.80 up to 1.60x0.70

Front Aprons **Gloss 180**		01184	**Velor 180**	06223
Front Panels	**Gloss 170**	01198	**Velor 170**	06281
	ALPHAPANEL 180	06389	**ALPHAPANEL 170**	06397
	ALPHAPANEL 160	06209	**ALPHAPANEL 150**	06399
	ALPHAPANEL 140	06217	**ALPHAPANEL 130**	06400
Side aprons	**Gloss 80**	04343	**Velor 80**	06283
Side Panels	**Gloss 70**	01161	**Velor 70**	06285
	ALPHAPANEL 80	06403	**ALPHAPANEL 75**	06404
	ALPHAPANEL 70	06405		

Perimetric support base Support set — 02494 01540

Select a faucet from the FAUCETS category

Choose a 45-55 cm long valve from the VALVES category
Choose a 45-55 cm valve, from the VALVES category

280-282

Machine Translated by Google

Machine Translated by Google

acrilan

Sine.

Classic aesthetics blend with modern design in this special model. Simple lines and non-negotiable elegance in perfect harmony.

Classic aesthetics blend with modern design in this special model. Simple lines and undisputed elegance are combined in absolute harmony.

Machine Translated by Google

Machine Translated by Google

Sine.

1.80x0.80m | 1.70x0.80m | 1.70X0.70m
1.60x0.70m | 1.50x0.70m

W

CHARACTERISTICS

SPECIFICATIONS:

Dimensions & Category

	Standard	MAXX coat		Standard	MAXX coat
1.80x0.80	04523	04633	**1.70x0.80**	04524	04561
1.70x0.70	03950	04258	**1.60x0.70**	04076	04272
1.50x0.70	04124	04293			

Capacity 180x80: **195Lt** 160x70: **155Lt** 170x80: **180Lt** 170x70: **165Lt**
150x70: **140Lt**

Material / Material **Cast Acrylic / Cast Acrylic**

Color / Color **White/White Gloss (standard)W**

It is equipped with a non-slip bottom

OPTIONAL OPTIONS

OPTIONAL:

282-283

Eco basic Chrome Hydromassage / Hydromassage	00464
No. 1 Hydromassage / Hydromassage	00461
No. 2 Hydromassage / Hydromassage	00466
Basic Aeromassage / Aeromassage	00491
Touch Hydro Hydromassage / Hydromassage	05123
Touch Hydro-aero Hydromassage - Aeromassage / Hydromassage - Aeromassage	05124

Hydromassage - aeromassage systems are available from dimensions 1.80x0.80 to and the dimension 1.60x0.70
Hydromassage & aeromassage systems are available in dimensions from 1.80x0.80 up to 1.60x0.70

Front Aprons	**Gloss 180**	01184	**Gloss 170**	01198
Front Panels	**ALPHAPANEL 180**	06389	**ALPHAPANEL 170**	06397
	ALPHAPANEL 160	06209	**ALPHAPANEL 150**	06399
Side aprons	**Gloss 80**	04343	**Gloss 70**	01161
Side Panels	**ALPHAPANEL 80**	06403	**ALPHAPANEL 70**	06405

Perimetric support base Support set 02494
01540

Select a faucet from the FAUCETS category

Choose a 45-55 cm long valve from the VALVES category
Choose a 45-55 cm valve, from the VALVES category

Machine Translated by Google

Machine Translated by Google

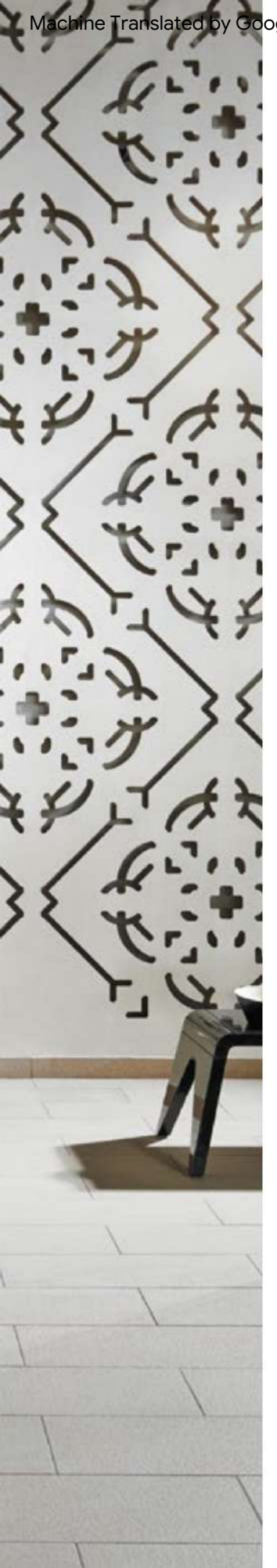

acrilan

Sunshine.

101

Minimal design for lovers of simplicity.

Minimal design for simplicity lovers.

Machine Translated by Google

Machine Translated by Google

W
1
2
3
4
5

Sunshine.

1.80x0.80m | 1.70x0.80m

CHARACTERISTICS

SPECIFICATIONS:

Dimensions & Category

	Standard	MAXX coat Velor Matte	Velor Matte	MAXX Coat
1.80x0.80	04767	05189	05755	06246
1.70x0.80	04166	04345	06290	06291

Capacity / Capacity **230Lt / 200Lt**

Material / Material **Cast Acrylic / Cast Acrylic**

Color / Color **White/White Gloss (standard)W, with non-slip bottom with a non-slip bottom**
Velor: Beige1 , Black2, Anthracite Grey3 , White4 , Light Gray5

OPTIONAL OPTIONS

OPTIONAL:

283

Eco basic Hydromassage **No. 1**	00464
Hydromassage **No. 2** Hydromassage	00461
	00466
Basic Aeromassage / Aeromassage	00491
Touch Hydro Hydromassage / Hydromassage	05123
Touch Hydro-aero Hydromassage - Aeromassage / Hydromassage - Aeromassage	05124

Front aprons	**Gloss 180** 01184	**Velor 180** 06223
Front panels	**Gloss 170** 01198	**Velor 170** 06281
	ALPHAPANEL 180 06389	**ALPHAPANEL 170** 06397
Side aprons	**Gloss 80** 04343	**Velor 80** 06283
Side panels	**ALPHAPANEL 80** 06403	

Perimetric support base Support set 02494
01540

Select a faucet from the FAUCETS category

Choose a 45-55 cm long valve from the VALVES category
Choose a 45-55 cm valve, from the VALVES category

Machine Translated by Google

Machine Translated by Google

acrilan

Zeta.

Aesthetics, functionality, design and ergonomics coexist harmoniously with its oval finishes and transform your personal space as you dream of it!

Aesthetics, functionality, design and ergonomics coexist harmoniously with the oval finishes of this bathtub and transform your bathroom into what you have dreamed of it!

Machine Translated by Google

Machine Translated by Google

W
1
2
3
4
5

Zeta.

1.80x0.80m

CHARACTERISTICS

SPECIFICATIONS:

Dimensions **1.80x0.80m**

Capacity / Capacity **275Lt**

Material / Material	**Cast Acrylic / Cast Acrylic**	
Category / Category	**Standard**	04054
	MAXX coat	04319
	Velor Matte	04445
	Velor Matte MAXX Coat	06287
Color / Color	**White/White Gloss (standard)W**	
	Velor: Beige1 , Black2, Anthracite Grey3 , White4, Light Gray5	

107

284

OPTIONAL OPTIONS

OPTIONAL:

Eco basic Hydromassage / Hydromassage 00464
No. 1 Hydromassage / Hydromassage 00461
No. 2 Hydromassage / Hydromassage 00466
Basic Aeromassage / Aeromassage 00491
Touch Hydro Hydromassage / Hydromassage 05123
Touch Hydro-aero Hydromassage - Aeromassage / Hydromassage - Aeromassage 05124

Aprons / Panels	**Gloss Front / Front**	04410
	Gloss Side	01161
	Velor Front / Front	06289
	Velor Side	06285
Perimetric support base Support set		02494
		01540

Select a faucet from the FAUCETS category

Choose a 45-55 cm long valve from the VALVES category
Choose a 45-55 cm valve, from the VALVES category

Machine Translated by Google

Machine Translated by Google

W
1
2
3
4
5

acrilan

Style.

1.70x0.80m

The Style bathtub, with oval finishes, meets the needs of a special style & modern design.

Style bathtub meets the needs of a special style & modern design with its oval finishes.

CHARACTERISTICS

SPECIFICATIONS:

109

Dimensions **1.70x0.80m**

Capacity / Capacity **250Lt**

Material / Material	**Cast Acrylic / Cast Acrylic**	
Category / Category	**Standard**	04126
	MAXX coat	04656
	Velor Matte	06292
	Velor Matte MAXX Coat	06293
Color / Color	**White/White Gloss (standard)W**	
	Velor: Beige1 , Black2, Anthracite Grey3 , White4 , Light Gray5	

277

OPTIONAL OPTIONS

OPTIONAL:

No. 1 Hydromassage / Hydromassage	00461
No. 2 Hydromassage / Hydromassage	00466
Basic Aeromassage / Aeromassage	00491
Perimetric support base Support set	02494
	01540

Choose a 45-55 cm long valve from the VALVES category
Choose a 45-55 cm valve, from the VALVES category

Machine Translated by Google

110

Machine Translated by Google

acrilan

Althea.

1.70x0.90m | 1.75x0.75m | 1.60x0.70m

A straight bathtub with a neutral design, which is an ideal choice for your bathroom.

A neutral designed rectangular bathtub, an ideal choice for your bathroom.

CHARACTERISTICS

SPECIFICATIONS:

Dimensions & Category

	Standard	MAXX coat	Velor Matte	Velor Matte MAXX Coat
1.70x0.90	06297	06298	06299	06300
1.75x0.75	06301	06302	06303	06304
1.60x0.70	06305	06306	06307	06308

Capacity / Capacity 1.70x0.90: **280Lt** 1.75x0.75: **180Lt** 1.60x0.70: **185Lt**

Material / Material **Cast Acrylic / Cast Acrylic**

Color / Color **White/White Gloss (standard)W**
Velor: Beige1 , Black2, Anthracite Grey3 , White4, Light Gray5

It is equipped with a non-slip bottom

OPTIONAL OPTIONS

OPTIONAL:

Eco basic Hydromassage **No. 1** 00464
Hydromassage **No. 2** Hydromassage 00461
00466
Basic Aeromassage / Aeromassage 00491

Front Aprons **Gloss 175** 01184 **Velor 175** 06223 **Alfapanel 175** 06396
Gloss 170 01198 **Velor 170** 06281 **Alfapanel 170** 06397
Front Panels **Alfapanel 160** 06209
Side aprons **Gloss 75** 04343 **Velor 75** 06283 **Alfapanel 90** 06457
Side Panels **Gloss 70** 01161 **Velor 70** 06285 **Alfapanel 75** 06404
Alfapanel 70 06405

Perimetric support base Support set 02494
01540

Select a faucet from the FAUCETS category

Choose a 45-55 cm long valve from the VALVES category
Choose a 45-55 cm valve, from the VALVES category

284

Machine Translated by Google

Machine Translated by Google

acrilan

Kyveli.

1.70x0.80m | 1.70x0.75m

Bathtub designed to fit harmoniously into any space and lifestyle.

A bathtub designed to fit harmoniously into any bathroom and lifestyle.

CHARACTERISTICS

SPECIFICATIONS:

Dimensions & Category	Standard	MAXX coat	Velor Matte	Velor Matte MAXX Coat
1.70x0.80	06313	06314	06392	06393
1.70x0.75	06278	06284	06390	06391

Capacity / Capacity	1.70x0.80: **215Lt** 1.70x0.75: **200Lt**
Material / Material	**Cast Acrylic / Cast Acrylic**
Color / Color	**White/White Gloss (standard)W** **Velor: Beige1 , Black2, Anthracite Grey3 , White4, Light Gray5**

285

OPTIONAL OPTIONS

OPTIONAL:

Eco basic Hydromassage **No. 1**			00464
Hydromassage **No. 2** Hydromassage			00461 00466
Basic Aeromassage / Aeromassage			00491
Front Aprons	**Gloss 170** 01198	**Velor 170** 06281	**Alfapanel 170** 06397
Front Panels Side skirts **Gloss 80/75** 04343 Side Panels		**Velor 80/75** 06283	**Alfapanel 80** 06403 **Alfapanel 75** 06404
Perimetric support base Support set			02494 01540

Choose a 45-55 cm long valve from the VALVES category
Choose a 45-55 cm valve, from the VALVES category

Machine Translated by Google

Machine Translated by Google

acrilan

Thassos.

1.70x0.75m | 1.55x0.75m

Bathtub with a straight design, with a raised side of the back. It has a non-slip bottom and handles can be added.

A rectangular bathtub with high backrest. It has a non-slip bottom, while handles can be added on request.

CHARACTERISTICS

SPECIFICATIONS:

Dimensions & Category

	Standard	MAXX coat
1.70x0.75	02452	04274
1.55x0.75	02455	04379

Capacity / Capacity — 1.70x0.75: **175Lt** 1.55x0.75: **155Lt**

Material / Material — **Cast Acrylic / Cast Acrylic**

Color / Color — **White/White Gloss (standard)W**

286

OPTIONAL OPTIONS

OPTIONAL:

Eco basic Hydromassage / Hydromassage 00464
No. 1 Hydromassage / Hydromassage 00461

Front Aprons **Gloss 170** 01198

Alfapanel 170 06397
Alfapanel 155 06398

Front Panels

Side skirts **Gloss 80/75** 04343

Alfapanel 75 06404

Side Panels

Perimetric support base Support set 02494
01540

Handle set (2pcs) / Handle set (2pcs) **Chrome 24.4cm** 02460

Choose a 45-55 cm long valve from the VALVES category
Choose a 45-55 cm valve, from the VALVES category

Machine Translated by Google

acrilan

Machine Translated by Google

W

acrilan

Skiathos.

1.75x0.80m | 1.65x0.70m

Straight design bathtub with a long bottom. It has a non-slip bottom.

A rectangular bathtub with a long and non-slip bottom.

CHARACTERISTICS
SPECIFICATIONS:

Dimensions & Category

	Standard	MAXX coat
1.75x0.80	02561	04450
1.65x0.70	02557	04301

Capacity 1.75x0.80: **200Lt** 1.65x0.70: **150Lt**

Material / Material **Cast Acrylic / Cast Acrylic**

Color / Color **White/White Gloss (standard)W**

286

OPTIONAL OPTIONS
OPTIONAL:

Eco basic Hydromassage / Hydromassage 00464
No. 1 Hydromassage / Hydromassage 00461

Front Aprons
Gloss 180 01184
Gloss 170 01198
Alfapanel 180 06389
Alfapanel 170 06397

Front Panels
Side aprons
Side Panels
Gloss 80 04343
Gloss 70 01161
Alfapanel 80 06403
Alfapanel 70 06405

Perimetric support base Support set
02494
01540

Choose a 45-55 cm long valve from the VALVES category
Choose a 45-55 cm valve, from the VALVES category

Machine Translated by Google

Machine Translated by Google

acrilan

iOS.

Bathtub inspired by the special requirements of your bathroom, with the aim of relaxation.

A bathtub inspired by the particular requirements of your bathroom for you complete relaxation.

Machine Translated by Google

120

acrilan

Machine Translated by Google

W

iOS.

1.80x0.80m | 1.70x0.70m

CHARACTERISTICS

SPECIFICATIONS:

Dimensions & Category

	Standard	MAXX coat
1.80x0.80	02100	04317
1.70x0.70	02097	04429

Capacity / Capacity	1.80x0.80: **225Lt** 1.70x0.70: **180Lt**
Material / Material	**Cast Acrylic / Cast Acrylic**
Color / Color	**White/White Gloss (standard)W**

287

OPTIONAL OPTIONS

OPTIONAL:

Eco basic Hydromassage **No. 1**	00464
Hydromassage **No. 2** Hydromassage	00461
	00466
Basic Aeromassage / Aeromassage	00491

Front Aprons	**Gloss 180** 01184	**Alfapanel 180** 06389
	Gloss 170 01198	**Alfapanel 170** 06397
Front Panels		
Side aprons	**Gloss 80** 04343	**Alfapanel 80** 06403
Side Panels	**Gloss 70** 01161	**Alfapanel 70** 06405

Select a faucet from the FAUCETS category

Perimetric support base Support set 02494
01540

Choose a 45-55 cm long valve from the VALVES category
Choose a 45-55 cm valve, from the VALVES category

Machine Translated by Google

Machine Translated by Google

W

acrilan

Dilos.

1.90x0.80/0.90m

Comfortable and functional, the Delos bathtub is added to our range and is an elegant intervention in the bathroom.
Comfortable and functional, Delos bathtub is now included in our tub range and is an elegant addition to your bathroom.

123

CHARACTERISTICS
SPECIFICATIONS:

Dimensions / Dimensions	**1.90 x 0.80/0.90m**
Capacity / Capacity	**305Lt**
Material / Material	**Cast Acrylic / Cast Acrylic**
Category / Category	**Standard** 02441 **MAXX coat** 04463
Color / Color	**White/White Gloss (standard)W**

285

OPTIONAL OPTIONS
OPTIONAL:

Aprons / Panels	**Gloss Front / Front** **Gloss Side / Side**	01191 01192

Select a faucet from the FAUCETS category

Choose a 45-55 cm long valve from the VALVES category
Choose a 45-55 cm valve, from the VALVES category

Machine Translated by Google

Machine Translated by Google

acrilan

Oval.

1.80x1.00m

An impressive bathtub that combines curves and minimal design.

An impressive bathtub that combines curves and minimal design.

277

CHARACTERISTICS

SPECIFICATIONS:

Dimensions / Dimensions	**1.80x1.00m**	
Capacity / Capacity	**340Lt**	
Material / Material	**Cast Acrylic / Cast Acrylic**	
Category / Category	**Standard**	06264
	MAXX coat	06265
	Velor Matte	06266
	Velor Matte MAXX Coat	06267
Color / Color	**White/White Gloss (standard)W** **Velor: Beige1 , Black2, Anthracite Grey3 , White4, Light Gray5**	

OPTIONAL OPTIONS

OPTIONAL:

No. 2 Hydromassage / Hydromassage	00466
Perimetric support base Support set	02495 01540

Choose a 70-80 cm long valve from the VALVES category
Choose a 70-80 cm valve, from the VALVES category

Machine Translated by Google

Machine Translated by Google

acrilan

Oval.

1.90x0.80m

An impressive bath tub that combines curves and minimal design.

An impressive bathtub that combines curves and minimal design.

277

CHARACTERISTICS

SPECIFICATIONS:

Dimensions / Dimensions	**1.90x0.80m**	
Capacity / Capacity	**200Lt**	
Material / Material	**Cast Acrylic / Cast Acrylic**	
Category / Category	**Standard**	06268
	MAXX coat	06269
	Velor Matte	06270
	Velor Matte MAXX Coat	06271
Color / Color	**White/White Gloss (standard)W** **Velor: Beige1 , Black2, Anthracite Grey3 , White4, Light Gray5**	

OPTIONAL OPTIONS

OPTIONAL:

No. 2 Hydromassage / Hydromassage	00466
Perimetric support base Support set	02495 01540

Choose a 70-80 cm long valve from the VALVES category
Choose a 70-80 cm valve, from the VALVES category

Machine Translated by Google

Machine Translated by Google

acrilan

Macedonia.

1.80x0.90m | 1.70x0.80m

Oval design bathtub with the valve in the middle, which allows the position of the body on both sides.

Oval bathtub with centrally placed valve in order to allow sitting or lying on both sides.

CHARACTERISTICS

SPECIFICATIONS:

Dimensions & Category

	Standard	MAXX coat
1.80x0.90	02220	04443
1.70x0.80	02217	06232

287

Capacity / Capacity — 1.80x0.90: **255Lt** 1.70x0.80: **195Lt**

Material / Material — **Cast Acrylic / Cast Acrylic**

OPTIONAL OPTIONS

OPTIONAL:

Eco basic Hydromassage / Hydromassage	00464
No. 1 Hydromassage / Hydromassage	00461
Perimetric support base Support set	02495
	01540

Choose a 56-65 cm (1.80x0.90) or 45-55 cm (1.70x0.80) length valve from the VALVES category
Choose a 56-65 cm (1.80x0.90) or a 45-55 cm (1.70x0. 80) valve, from the VALVES category

Machine Translated by Google

130

Machine Translated by Google

W
1
2
3
4
5

acrilan

Eliza.

1.70x0.70m | 1.60x0.65m

Luxury intertwined with simplicity create a new perspective on the bathroom space.
Luxury combined with simplicity create a new concept for your bathroom design.

CHARACTERISTICS

SPECIFICATIONS:

Dimensions / Dimensions	**1.70x0.70m**	**1.60x0.65m**
Capacity / Capacity	**160Lt**	**150Lt**
Material / Material	**Cast Acrylic / Cast Acrylic**	

Category / Category	**170**	**160**
Standard	06635	05204
MAXX coat	06636	05464
Velor Matte	06637	06295
Velor Matte MAXX Coat	06638	06296

Color / Color

White/White Gloss (standard)W
Velor: Beige1 , Black2, Anthracite Grey3 , White4 , Light Gray5

278

OPTIONAL OPTIONS

OPTIONAL:

No. 1 Hydromassage / Hydromassage	06595
Perimetric support base Support set	02494 01540

Choose a 45-55 cm long valve from the VALVES category
Choose a 45-55 cm valve, from the VALVES category

Machine Translated by Google

Machine Translated by Google

W

acrilan

Kymi.

1.05x0.70m

Straight design bathtub with seat, ideal for small bathrooms.

A rectangular bathtub with seat, ideal for small bathrooms.

133

288

CHARACTERISTICS

SPECIFICATIONS:

Dimensions / Dimensions	**1.05x0.70m**	
Capacity / Capacity	**80Lt**	
Material / Material	**Cast Acrylic / Cast Acrylic**	
Category / Category	**Standard**	05169
	MAXX coat	05799
Color / Color	**White/White Gloss (standard)W**	

OPTIONAL OPTIONS

OPTIONAL:

Aprons / Panels	**Alfapanel 100**	06401
	Alfapanel 70	06405
Perimetric support base		02494

Choose a 45-55 cm long valve from the VALVES category
Choose a 45-55 cm valve, from the VALVES category

Machine Translated by Google

Machine Translated by Google

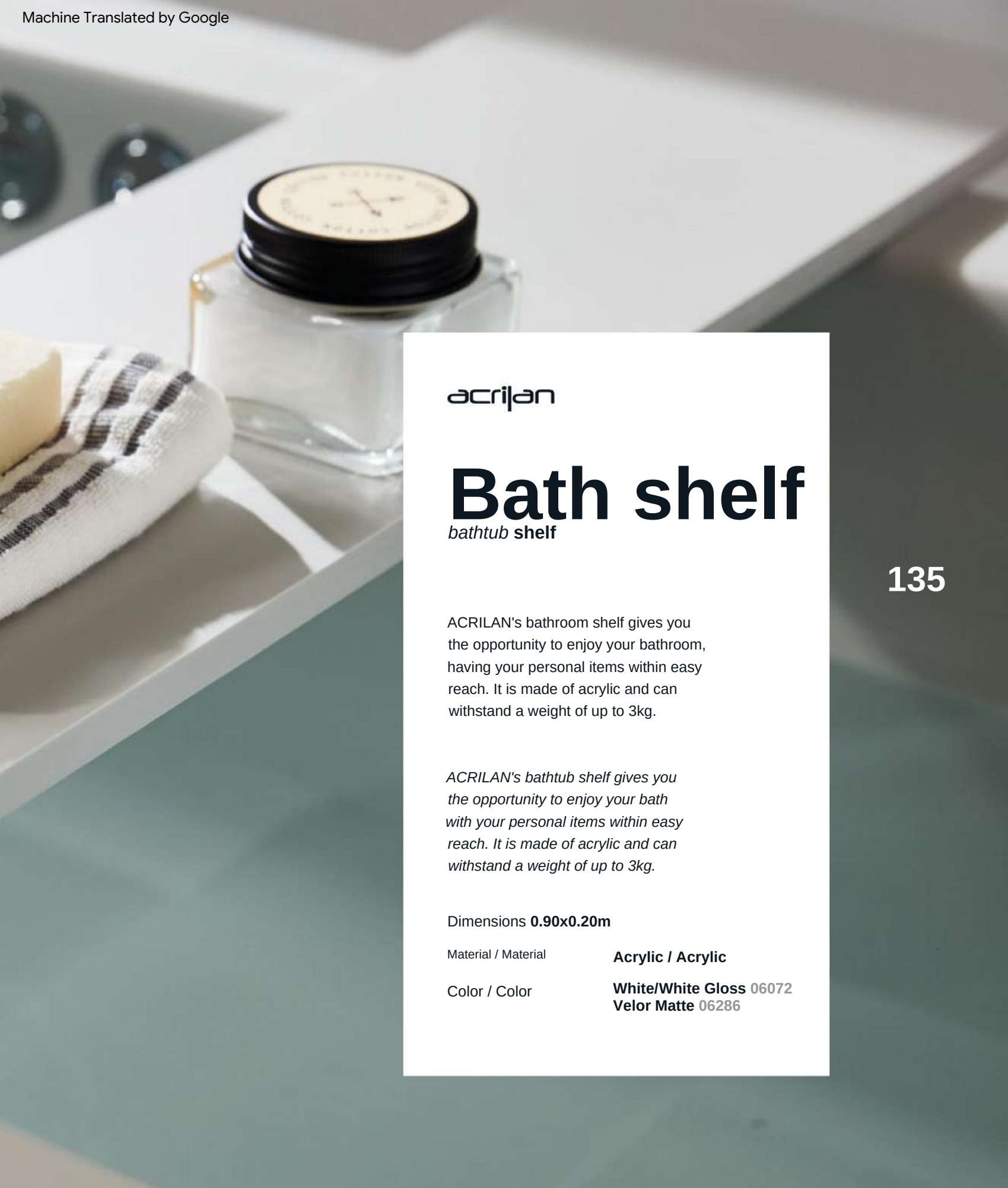

acrilan

Bath shelf

bathtub **shelf**

ACRILAN's bathroom shelf gives you the opportunity to enjoy your bathroom, having your personal items within easy reach. It is made of acrylic and can withstand a weight of up to 3kg.

ACRILAN's bathtub shelf gives you the opportunity to enjoy your bath with your personal items within easy reach. It is made of acrylic and can withstand a weight of up to 3kg.

Dimensions **0.90x0.20m**

Material / Material	**Acrylic / Acrylic**
Color / Color	**White/White Gloss** 06072 **Velor Matte** 06286

Machine Translated by Google

Machine Translated by Google

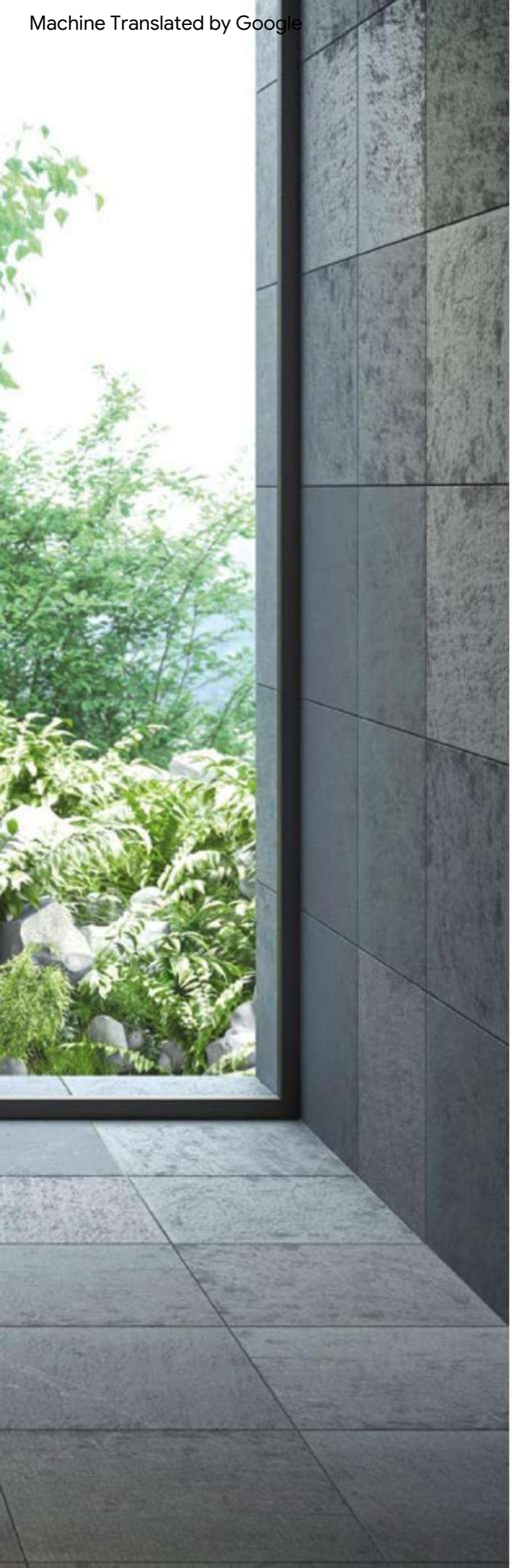

acrilan

angular

corner *bathtubs*

137137

Perfect aesthetics and non-negotiable simplicity form a new perception in the bathroom space.

Perfect aesthetics and non-negotiable simplicity form a new perception in your bathroom.

Machine Translated by Google

Machine Translated by Google

acrilan

Serifos.

1.60x1.60m

Corner design bathtub with a large interior space. It has a seat, raised anatomical back and non-slip bottom.

Corner bathtub with ample interior space. It has a seat with anatomical backrest and non-slip bottom.

CHARACTERISTICS

SPECIFICATIONS:

Dimensions / Dimensions	**1.60x1.60m**
Capacity / Capacity	**385Lt**
Material / Material	**Cast Acrylic / Cast Acrylic**
Category / Category	**Standard** 02545 **MAXX coat** 04464
Color / Color	**White/White Gloss (standard)W**

139

288

Perimetric support base / Perimetric support base * It is necessary to install the perimeter base due to the raised back. 02495

It is necessary the placement of the perimetric support base due to the raised backrest.

OPTIONAL OPTIONS

OPTIONAL:

No. 2 Hydromassage / Hydromassage 00466
Basic Aeromassage / Aeromassage 00491
Touch Hydro Hydromassage / Hydromassage 05123
Touch Hydro-aero Hydromassage - Aeromassage / Hydromassage - Aeromassage 05124

White Gloss Serifos Apron / White Gloss Serifos Panel 01162

Select a faucet from the FAUCETS category

Choose a 56-65 cm long valve from the VALVES category
Choose a 56-65 cm valve, from the VALVES category

Machine Translated by Google

acrilan

140

Machine Translated by Google

acrilan

Diva.

1.50x1.50m

Corner bath with oval finishes, the embodiment of pleasure and absolute comfort.
This corner bathtub with oval finishes, is the actual epitome of pleasure and ultimate comfort.

288

CHARACTERISTICS

SPECIFICATIONS:

Dimensions / Dimensions	**1.50x1.50m**	
Capacity / Capacity	**350Lt**	
Material / Material	**Cast Acrylic / Cast Acrylic**	
Category / Category	**Standard**	04132
	MAXX coat	06320
	Velor Matte	06321
	Velor Matte MAXX Coat	06322
Color / Color	**White/White Gloss (standard)W**	
	Velor: Beige1 , Black2, Anthracite Grey3 , White4 , Light Gray5	

OPTIONAL OPTIONS

OPTIONAL:

No. 1 Hydromassage / Hydromassage 00461
No. 2 Hydromassage / Hydromassage 00466
Basic Aeromassage / Aeromassage 00491
Touch Hydro Hydromassage / Hydromassage 05123
Touch Hydro-aero Hydromassage - Aeromassage / Hydromassage - Aeromassage 05124

In the case of free installation, it is available with a perimeter braid of 06596 flax
In case you choose a freestanding bathtub, it is available with a perimetric knitted cladding made of flax rope.

Perimetric support base 02495

Select a faucet from the FAUCETS category

Choose a 90 cm long valve from the VALVES category
Choose a 90 cm valve, from the VALVES category

Machine Translated by Google

Machine Translated by Google

acrilan

Isabel.

143

Perfect aesthetics and non-negotiable simplicity form
a new concept in the bathroom space.
Its perfect aesthetics and non-negotiable simplicity form a new concept in your bathroom.

Machine Translated by Google

Machine Translated by Google

acrilan

W
1
2
3
4
5

Isabel.

1.45x1.45m

CHARACTERISTICS

SPECIFICATIONS:

Dimensions / Dimensions **1.45x1.45m**

Capacity / Capacity **280Lt**

Material **Cast Acrylic**

Category	**Standard**	04131
Category	**MAXX coat**	04465
	Velor Matte	06317
	Velor Matte MAXX Coat	06318

Color **White Gloss (standard)W**
Velor: Beige1 , Black2, Anthracite Grey3 , White4, Light Gray5

145

288

OPTIONAL OPTIONS

OPTIONAL:

No. 1 Hydromassage / Hydromassage	00461
No. 2 Hydromassage / Hydromassage	00466
Basic Aeromassage / Aeromassage	00491
Touch Hydro Electronic / Electronic	05123
Touch Hydro-aero Hydromassage - Aeromassage / Hydromassage - Aeromassage	05124

Apron Isabel White Gloss / White Gloss Isabel Panel	04143
Apron Isabel Velor Matte / Velor Matte Isabel Panel	06316

Perimetric support base Support set	02495
	01540

QUADRA (polyurethane) pillow / **QUADRA** (polyurethane) pillow
White / White 04638 Black / Black 03601

Select a faucet from the FAUCETS category

Choose a 45-55 cm long valve from the VALVES category
Choose a 45-55 cm valve, from the VALVES category

Machine Translated by Google

Machine Translated by Google

W

acrilan

Poseidon.

1 . 4 0 x 1 . 40 m

Corner bath with seat and valve in the middle so as to allow the position of the body on both sides.

A corner bathtub with seat and centrally placed valve in order to allow sitting or lying on both sides.

147

289

CHARACTERISTICS

SPECIFICATIONS:

Dimensions **1.40x1.40m**

Capacity / Capacity **185Lt**

Material / Material	**Cast Acrylic / Cast Acrylic**	
Category / Category	**Standard**	02513
	MAXX coat	04472
Color / Color	**White/White Gloss (standard)W**	
Perimetric support base Support set		02495 01540

OPTIONAL OPTIONS

OPTIONAL:

Eco basic Hydromassage **No. 1**	00464
Hydromassage **No. 2** Hydromassage	00461
	00466
Basic Aeromassage / Aeromassage	00491

Apron Poseidon White Gloss / White Gloss Poseidon Panel 01176

Select a faucet from the FAUCETS category

Choose a 45-55 cm long valve from the VALVES category
Choose a 45-55 cm valve, from the VALVES category

Machine Translated by Google

Machine Translated by Google

acrilan

Ikaria.

1.40x1.40m | 1.20x1.20m

Corner bath with a special design.

A corner bathtub with unique design.

CHARACTERISTICS
SPECIFICATIONS:

Dimensions & Category

	Standard	MAXX coat
1.40x1.40	02094	04470
1.20x1.20	02091	04427

Capacity / Capacity	**200 / 135Lt**
Material / Material	**Cast Acrylic / Cast Acrylic**
Color / Color	**White/White Gloss (standard)W**

289

OPTIONAL OPTIONS
OPTIONAL:

Eco basic Hydromassage / Hydromassage 00464
No. 1 Hydromassage / Hydromassage 00461
No. 2 Hydromassage / Hydromassage 00466
Basic Aeromassage / Aeromassage 00491

Ikaria White Gloss Aprons White Gloss Ikaria Panel	**140** 01097	**120** 01098
Perimeter support base Perimetric support base	**140** 02495	**120** 02494
Support set / Support set	01540	

Select a faucet from the FAUCETS category

Choose a 45-55 cm long valve from the VALVES category
Choose a 45-55 cm valve, from the VALVES category

Machine Translated by Google

acrilan

150

acrilan

Machine Translated by Google

W

acrilan

Santorini.

1 . 2 7 x 1 . 2 7 m

Corner bath with comfortable seat, cushion, valve in the middle and handle.

A corner bathtub with comfortable seat, bath pillow, centrally placed valve and grab bar.

CHARACTERISTICS

SPECIFICATIONS:

151

Dimensions **1.27x1.27m**

Capacity / Capacity **200Lt**

Material / Material	**Cast Acrylic / Cast Acrylic**
Category / Category	**Standard** 02540 **MAXX coat** 04292
Color / Color	**White/White Gloss (standard)W**

289

The 24.5cm chrome handle is included

OPTIONAL OPTIONS

OPTIONAL:

Eco basic Hydromassage / Hydromassage	00464
No. 1 Hydromassage / Hydromassage	00461
Apron Santorini 130 White Gloss / White Gloss Santorini Panel	01099
Perimetric support base Support set	02494 01540

Choose a 45-55 cm long valve from the VALVES category
Choose a 45-55 cm valve, from the VALVES category

Machine Translated by Google

acrilan

152

acrilan

Machine Translated by Google

W

acrilan

Mykonos. 145

1 .4 5 x 1 .4 5 m

Corner bathtub with comfortable interior space. It has a seat, soap holders, a handle and a non-slip bottom.

A corner bathtub with comfortable interior space. It has a seat, soap dish holders, handle and non-slip bottom.

CHARACTERISTICS

SPECIFICATIONS:

Dimensions / Dimensions	**1.45x1.45m**	
Capacity / Capacity	**225Lt**	
Material / Material	**Cast Acrylic / Cast Acrylic**	
Category / Category	**Standard** **MAXX coat**	02281 04466
Color / Color	**White/White Gloss (standard)W**	

The 24.5cm chrome handle is included

153

290

OPTIONAL OPTIONS

OPTIONAL:

Eco basic Hydromassage **No. 1**	00464
Hydromassage **No. 2** Hydromassage	00461
	00466

Apron Mykonos 145 White Gloss / White Gloss Mykonos 145 Panel 01167

Perimetric support base Support set	02495
	01540

Choose a 45-55 cm long valve from the VALVES category
Choose a 45-55 cm valve, from the VALVES category

Machine Translated by Google

acrilan

154

acrilan

Machine Translated by Google

W

acrilan

Mykonos. 125

1 . 2 5 x 1 . 2 5 m

Corner bath with seat, handle and non-slip bottom. It is an excellent solution for small spaces.
A corner bathtub with seat, handle and non-slip bottom.
An excellent solution for small spaces.

155

290

CHARACTERISTICS
SPECIFICATIONS:

Dimensions **1.25x1.25m**

Capacity / Capacity	**160Lt**	
Material / Material	**Cast Acrylic / Cast Acrylic**	
Category / Category	**Standard**	02278
	MAXX coat	04288
Color / Color	**White/White Gloss (standard)W**	

The 24.5cm chrome handle is included

OPTIONAL OPTIONS
OPTIONAL:

Eco basic Hydromassage / Hydromassage	00464
No. 1 Hydromassage / Hydromassage	00461

Apron Mykonos 125 White Gloss / White Gloss Mykonos 125 Panel 01168

Perimetric support base Support set	02494
	01540

Choose a 45-55 cm long valve from the VALVES category
Choose a 45-55 cm valve, from the VALVES category

Machine Translated by Google

Machine Translated by Google

W

acrilan

Mykonos.105

1. 0 5 x 1 . 0 5 m

Corner bath, ideal for small bathrooms due to its size.

A corner bathtub, ideal for small bathrooms due to its size. Provided with non-slip bottom, seat and handle.

CHARACTERISTICS

SPECIFICATIONS:

Dimensions **1.05x1.05m**

Capacity / Capacity	**110Lt**
Material / Material	**Cast Acrylic / Cast Acrylic**
Category / Category	**Standard** 02275 **MAXX coat** 04474
Color / Color	**White/White Gloss (standard)W**

The 16cm chrome handle is included

157

290

OPTIONAL OPTIONS

OPTIONAL:

Eco basic Hydromassage / Hydromassage 00464

Apron Mykonos 105 White Gloss / White Gloss Mykonos 105 Panel 01169

Perimetric support base Support set 02494
01540

Choose a 45-55 cm long valve from the VALVES category
Choose a 45-55 cm valve, from the VALVES category

Machine Translated by Google

Machine Translated by Google

W

acrilan

Mykonos.90

0 . 9 0 x 0 . 90 m

Mykonos corner bath, ideal for very small bathrooms.
A corner bathtub, ideal for very small bathrooms.

159

CHARACTERISTICS

SPECIFICATIONS:

Dimensions **0.90x0.90m**

Capacity / Capacity	**105Lt**
Material / Material	**Cast Acrylic / Cast Acrylic**
Category / Category	**Standard** 02285 **MAXX coat** 04475
Color / Color	**White/White Gloss (standard)W**

290

The 16cm chrome handle is included

OPTIONAL OPTIONS

OPTIONAL:

Apron Mykonos 90 White Gloss / White Gloss Mykonos 90 Panel 01557

Perimetric support base Support set 02494
01540

Choose a 45-55 cm long valve from the VALVES category
Choose a 45-55 cm valve, from the VALVES category

Machine Translated by Google

Machine Translated by Google

acrilan

asymmetrical

asymmetrical *bathtubs*

Asymmetric bathtubs perfectly combine interior comfort with saving space in your bathroom.

Asymmetric bathtubs perfectly provide for a comfortable interior while saving space in your bathroom.

Machine Translated by Google

Machine Translated by Google

acrilan

Kochili.170

W

1 . 7 0 x 0 . 70 m

Corner bath of asymmetrical design. Available for placement in the left (No1) or right corner (No2).

A corner bathtub with asymmetrical design. Available for left (No1) or right (No2) corner.

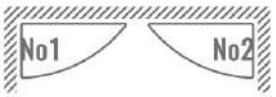

CHARACTERISTICS

SPECIFICATIONS:

Dimensions **1.70x0.70m**		
Capacity / Capacity	**160Lt**	
Material / Material	**Cast Acrylic / Cast Acrylic**	
	No. 1	**No. 2**
Category / Category	**Standard** 02163	02154
Color / Color	**MAXX coat** 04333 **White/ White Gloss (standard)W**	04817

163

291

OPTIONAL OPTIONS

OPTIONAL:

Eco basic Hydromassage / Hydromassage	00464
No. 1 Hydromassage / Hydromassage	00461

Apron Kochili 170 White Gloss / White Gloss Kochili 170 Panel **No 1** 01102
Apron Kochili 170 White Gloss / White Gloss Kochili 170 Panel **No 2** 01103

Perimetric support base Support set	02494
	01540

Select a faucet from the FAUCETS category

Choose a 45-55 cm long valve from the VALVES category
Choose a 45-55 cm valve, from the VALVES category

Machine Translated by Google

Machine Translated by Google

acrilan

Kochili.160

W

1. 6 0 x 0 . 90 m

Corner bathtub, asymmetrical design with non-slip bottom. Available for placement in the left (No1) or right corner (No2).

A corner bathtub with asymmetrical design and non-slip bottom. Available for left (No1) or right (No2) corner.

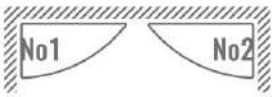

CHARACTERISTICS

SPECIFICATIONS:

Dimensions **1.60x0.90m**

165

Capacity / Capacity	**170 Lt**		
Material / Material	**Cast Acrylic / Cast Acrylic**		
		No.	**No. 2**
Category / Category	**Standard**	**1**	02149
	MAXX coat	02161 04428	04322
Color / Color	**White/White Gloss (standard)W**		

291

OPTIONAL OPTIONS

OPTIONAL:

Eco basic Hydromassage / Hydromassage	00464	
No. 1 Hydromassage / Hydromassage	00461	
Apron Shell 160 White Gloss / White Gloss Kochili 160 Panel **No 1**		01100
Apron Shell 160 White Gloss / White Gloss Kochili 160 Panel **No 2**		01101
Perimetric support base Support set	02494	
	01540	

Select a faucet from the FAUCETS category

Choose a 45-55 cm long valve from the VALVES category
Choose a 45-55 cm valve, from the VALVES category

Machine Translated by Google

Machine Translated by Google

acrilan

Kochili.153

W

1. 5 3 x 1 . 0 0 m

Corner bathtub, asymmetrical design with non-slip bottom. Available for placement in the left (No1) or right corner (No2).

A corner bathtub with asymmetrical design and non-slip bottom. Available for left (No1) or right (No2) corner.

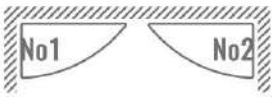

CHARACTERISTICS

SPECIFICATIONS:

Dimensions / Dimensions **1.53x1.00m**			
Capacity / Capacity	**200Lt**		
Material / Material	**Cast Acrylic / Cast Acrylic**		
		No.	**No. 2**
Category / Category	**Standard**	**1**	06325
	MAXX coat	06323 06324	06326
Color / Color	**White/White Gloss (standard)W**		

292

OPTIONAL OPTIONS

OPTIONAL:

Eco basic Hydromassage **No. 1**	00464
Hydromassage **No. 2** Hydromassage	00461
	00466

Apron Shell 153 White Gloss / White Gloss Kochili 153 Panel **No 1**	06327
Apron Shell 153 White Gloss / White Gloss Kochili 153 Panel **No 2**	06328

Perimetric support base Support set	02494
	01540

Select a faucet from the FAUCETS category

Choose a 45-55 cm long valve from the VALVES category
Choose a 45-55 cm valve, from the VALVES category

Machine Translated by Google

Machine Translated by Google

acrilan

Kochili.145

W

1 . 4 5 x 0 . 90 m

Corner bathtub, asymmetrical design. Available for placement in the left (No1) or right corner (No2).

A corner bathtub with asymmetrical design. Available for left (No1) or right (No2) corner.

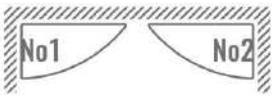

CHARACTERISTICS

SPECIFICATIONS:

Dimensions **1.45x0.90m**

169

Capacity / Capacity	**130Lt**		
Material / Material	**Cast Acrylic / Cast Acrylic**		
		No.	**No. 2**
Category / Category	**Standard**	**1**	04176
	MAXX coat	04192 04330	04553
Color / Color	**White/White Gloss (standard)W**		

292

OPTIONAL OPTIONS

OPTIONAL:

Eco basic Hydromassage / Hydromassage	00464
Apron Shell 145 White Gloss / White Gloss Kochili 145 Panel **No 1**	04198
Apron Shell 145 White Gloss / White Gloss Kochili 145 Panel **No 2**	04179
Perimetric support base Support set	02494 01540

Select a faucet from the FAUCETS category

Choose a 45-55 cm long valve from the VALVES category
Choose a 45-55 cm valve, from the VALVES category

Machine Translated by Google

170

Machine Translated by Google

acrilan

Kochili.135

W

1. 3 5 x 0 . 80 m

Corner bathtub, asymmetrical design. Available for placement in the left (No1) or right corner (No2).

A corner bathtub with asymmetrical design. Available for left (No1) or right (No2) corner.

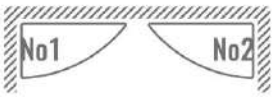

CHARACTERISTICS

SPECIFICATIONS:

171

Dimensions **1.35x0.80m**

Capacity / Capacity **115Lt**

Material / Material **Cast Acrylic / Cast Acrylic**

		No.	No. 2
Category / Category	**Standard**	**1**	02169
	MAXX coat	02171 04423	04479

293

Color / Color **White/White Gloss (standard)W**

OPTIONAL OPTIONS

OPTIONAL:

Eco basic Hydromassage / Hydromassage 00464

Apron Shell 135 White Gloss / White Gloss Kochili 135 Panel **No 1** 01104
Apron Shell 135 White Gloss / White Gloss Kochili 135 Panel **No 2** 01105

Perimetric support base Support set 02494
01540

Select a faucet from the FAUCETS category

Choose a 45-55 cm long valve from the VALVES category
Choose a 45-55 cm valve, from the VALVES category

Machine Translated by Google

Machine Translated by Google

acrilan

Kochili.125

1 . 2 5 x 0 . 90 m

Corner bathtub, asymmetrical design. Available for placement in the left (No1) or right corner (No2).

A corner bathtub with asymmetrical design. Available for left (No1) or right (No2) corner.

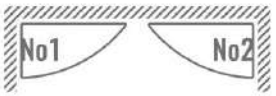

CHARACTERISTICS
SPECIFICATIONS:

Dimensions **1.25x0.90m**

Capacity / Capacity	**100Lt**		
Material / Material	**Cast Acrylic / Cast Acrylic**		
		No1	**No.**
Category / Category	**Standard**	02167	**2** 02166
	MAXX coat	04298	04545
Color / Color	**White/White Gloss (standard)W**		

293

OPTIONAL OPTIONS
OPTIONAL:

Apron Shell 125 White Gloss / White Gloss Kochili 125 Panel **No 1**	01179
Apron Shell 125 White Gloss / White Gloss Kochili 125 Panel **No 2**	01180
Perimetric support base Support set	02494 01540

Select a faucet from the FAUCETS category

Choose a 45-55 cm long valve from the VALVES category
Choose a 45-55 cm valve, from the VALVES category

Machine Translated by Google

acrilan

174 pillows.

pillows

Machine Translated by Google

narwhal.

Dimension/Dimensions: **27x13cm**

Color/Color:	**White/White**	04978
	Chrome	04977
	Black/Black	05368
Material/Material:	**Polyurethane/Polyurethane**	

quadra.

Dimension/Dimensions: **30x24cm**

Color/Color:	**White/White**	04638
	Black/Black	03601
Material/Material:	**Polyurethane/Polyurethane**	

sense.

Dimension/Dimensions: **24x21cm**

Color/Color:	**Black/Black**	01315
Material/Material:	**Polyurethane/Polyurethane**	

Machine Translated by Google

Machine Translated by Google

acrilan

economy line |

inexpensive *bathtubs*

177177

The Economy Line series is the economic line of our company. The models cover both large and smaller spaces.

The Economy Line bathtubs are our company's more affordable bathtub range. These designs can be ideal for both large and small bathrooms.

Machine Translated by Google

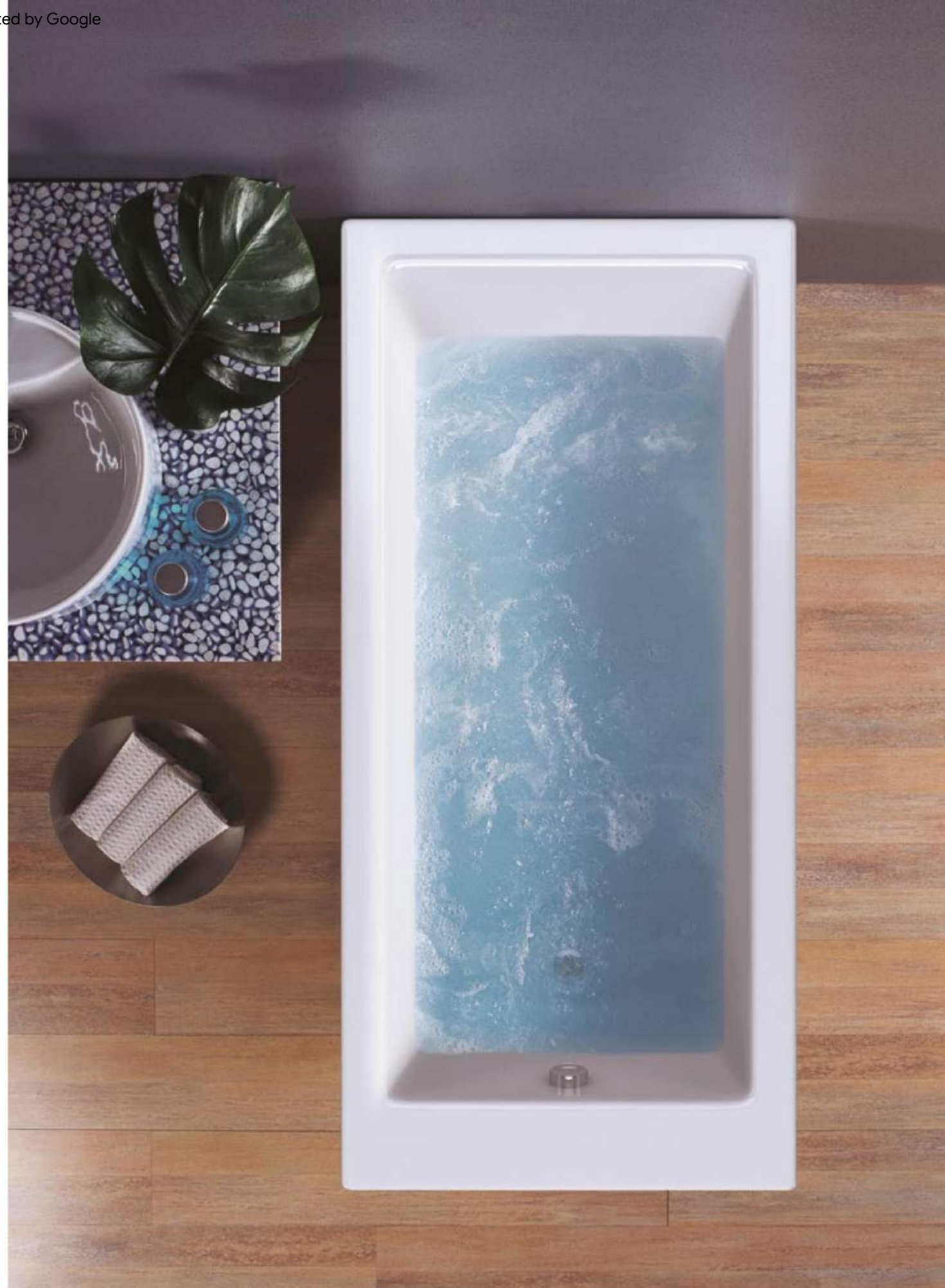

Machine Translated by Google

acrilan

Minimal.

W

1.80x0.80 | 1.70x0.80 | 1.70x0.75
1.70x0.70 | 1.60x0.75 | 1.60x0.70
1.50x0.70 | 1.40x0.70 | 1.30x0.70

Approach to comfort & minimal aesthetics that gives your bathroom an excellent combination of superiority and functionality.
Comfortable and minimalist design that brings to your bathroom an exceptional combination of functionality and excellence.

CHARACTERISTICS
SPECIFICATIONS:

		Capacity		Capacity
		Capacity		Capacity
Dimensions **1.80x0.80** 04620	**1.70x0.80** 04630	**230Lt**	**1.60x0.70** 05244	**155Lt**
	1.70x0.75 04517	**200Lt**	**1.50x0.70** 04629	**145Lt**
	1.70x0.70 04516	**190Lt**	**1.40x0.70** 04926	**130Lt**
	1.60x0.75 04518	**180Lt**	**1.30x0.70** 05236	**120Lt**
		160Lt		

179

Material / Material	**ABS/PMMA with/with UV**
Category / Category	**Standard**
Color / Color	**White/White Gloss (standard)W**

294-296

OPTIONAL OPTIONS
OPTIONAL:

Eco basic Hydromassage / Hydromassage 00464

Front Aprons	**Gloss 180** 01184
Front Panels	**Gloss 170** 01198
Side Aprons	**Gloss 80/75** 04343
Side Panels	**Gloss 70** 01161

Perimetric support base Support set 01388 01540

Choose a 45-55 cm long valve from the VALVES category
Choose a 45-55 cm valve, from the VALVES category

Economical valve 45-55 cm with siphon 04508
45-55 cm economic siphon valve

Machine Translated by Google

180

Machine Translated by Google

acrilan

Star Line Classic.

1.70x0.70 | 1.60x0.70 | 1.50x0.70 | 1.40x0.70
1. 3 0 x 0 . 7 0 | 1 2 0 x 0 . 7 0 | 1. 0 5 x 0 . 7 0

Straight bathtub with a large interior in relation to its exterior dimensions.

A rectangular bathtub with ample interior space compared to its compact external dimensions.

W

CHARACTERISTICS

SPECIFICATIONS:

		Capacity		Capacity
		Capacity		Capacity
Dimensions	**1.70x0.70** 03777	**155Lt**	**1.30x0.70** 04216	**110Lt**
	1.60x0.70 04212	**145Lt**	**1.20x0.70** 03962	**105Lt**
	1.50x0.70 03965	**140Lt**	**1.05x0.70** 04211	**90Lt**
	1.40x0.70 04213	**120Lt**		

181

Material / Material	**ABS/PMMA with/with UV**
Category / Category	**Standard**
Color / Color	**White/White Gloss (standard)W**

296-297

OPTIONAL OPTIONS

OPTIONAL:

Eco basic Hydromassage / Hydromassage 00464

Front Panel / Side Panel	**Gloss 170** 01198	
	Gloss 70 01161	
Perimetric support base Support set		01388
		01540

Choose a 45-55 cm long valve from the VALVES category
Choose a 45-55 cm valve, from the VALVES category

Economical valve 45-55 cm with siphon 04508
45-55 cm economic siphon valve

Machine Translated by Google

Machine Translated by Google

acrilan

Star Line.155

1.55 x 1.00 m

Corner bathtub of asymmetrical design with seat and non-slip bottom. Available for placement in the left (No1) or right corner (No2).

A corner bathtub with asymmetrical design, having a seat and non-slip bottom. Available for left (No1) or right (No2) corner.

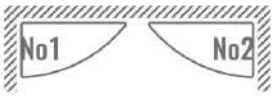

CHARACTERISTICS
SPECIFICATIONS:

Dimensions / Dimensions **1.55x1.00m**

	No. 1	No. 2
Capacity / Capacity	**155Lt**	**155Lt**
Material / Material	**ABS/PMMA with/with UV**	
Category / Category	**Standard**	
	No. 1	No. 2
	03738	03713
Color / Color	**White/White Gloss (standard)W**	

298

OPTIONAL OPTIONS
OPTIONAL:

Eco basic Hydromassage / Hydromassage 00464

Apron Star Line 155 White Gloss / White Gloss Star Line 155 Panel **No. 1** 03813
Apron Star Line 155 White Gloss / White Gloss Star Line 155 Panel **No 2** 03733

Perimetric support base Support set 01388
01540

Choose a 45-55 cm long valve from the VALVES category
Choose a 45-55 cm valve, from the VALVES category

Machine Translated by Google

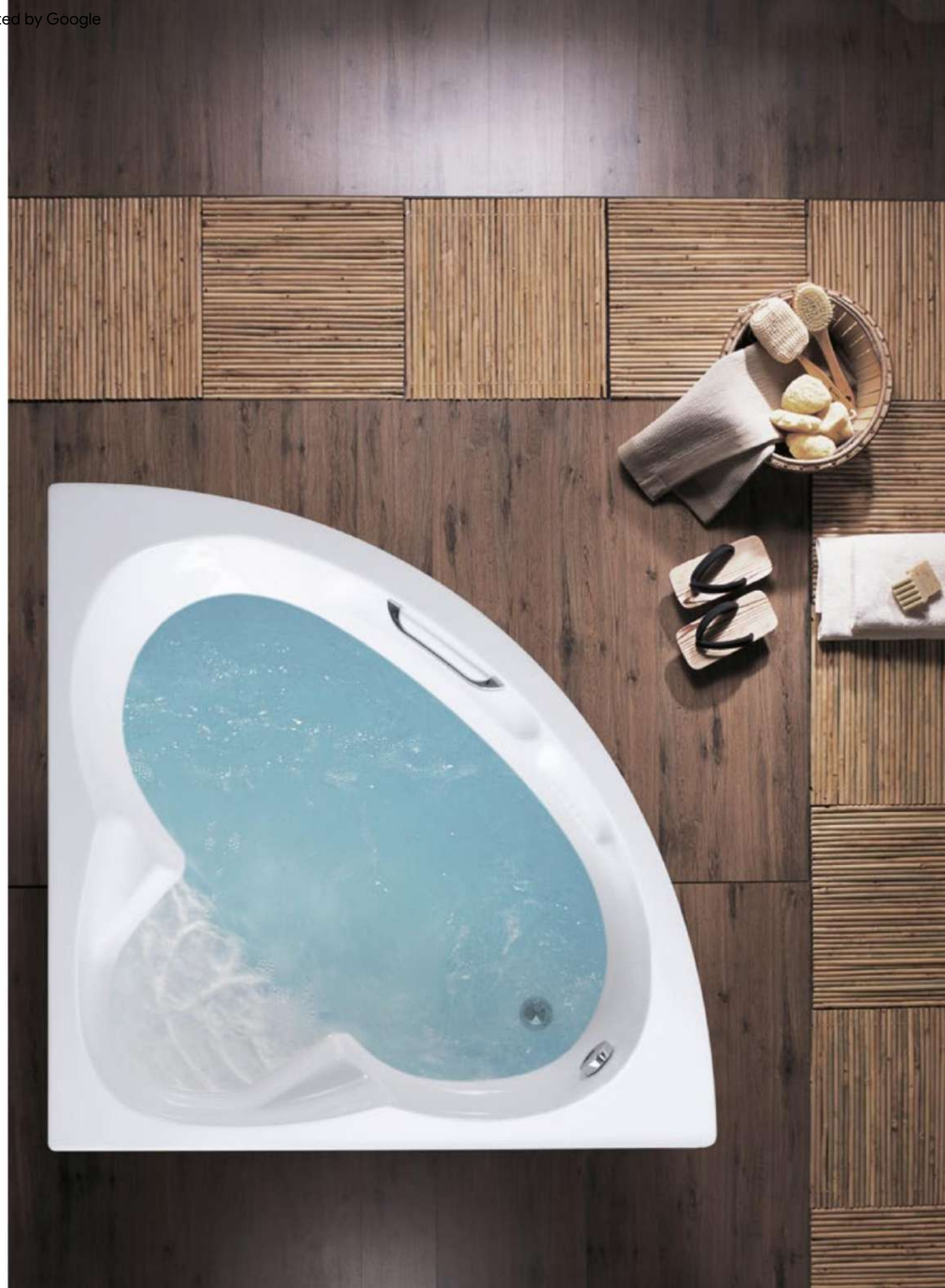

Machine Translated by Google

acrilan

W

acrilan

Star Line.125

1 . 2 5 x 1 . 2 5 m

Corner bath with soap dish seat, handle and non-slip bottom. It is an excellent solution for small spaces.

A corner bathtub with a seat, soap holder, handle and non-slip bottom.
An excellent solution for small spaces.

CHARACTERISTICS

SPECIFICATIONS:

185

Dimensions **1.25x1.25m**

Capacity / Capacity	**160Lt**	
Material / Material	**ABS/PMMA with/with UV**	
Category / Category	**Standard**	05242
Color / Color	**White/White Gloss (standard)W**	

298

The chrome handle is included.

OPTIONAL OPTIONS

OPTIONAL:

Eco basic Hydromassage / Hydromassage	00464
Apron Star Line Corner White Gloss 125 White Gloss Corner Star Line 125 Panel	01168
Perimetric support base Support set	01388 01540

Choose a 45-55 cm long valve from the VALVES category
Choose a 45-55 cm valve, from the VALVES category

Machine Translated by Google

acrilan

186 valves.

valves

CGS
PERCORSI D'ACQUA

SILFRA

PRODOTTO IN
ITALIA

Machine Translated by Google

Machine Translated by Google

Heavy duty automatic

Automatic heavy-duty valve

Shower valve brass (Heavy type) vertical standby, cable actuation and Brass plug ø42mm.
Brass bathtub valve with vertical standby piping, a set screw enabling movement and a ø42mm Brass cover.

Dimension/Length: **45-55cm**
Color: **Chrome** 03626
Gold 06358 **Bronze** 01622

Dimension/Length: **56-65cm**
Color/Color: **Chromé/Chrome** 01618

Siphon/Drain pipe 03227

Heavy duty automatic minimal

Automatic heavy-duty valve minimal

Brass bath valve (Heavy type) vertical stop, cable actuation and Brass plug ø72mm.
Brass bathtub valve with vertical standby piping, a set screw enabling movement and a 72mm Brass cover.

Dimension/Length: **45-55cm** 06476
70-80cm 06477

Color/Color: **Chrome/Chrome**

Siphon/Drain pipe 03227

Heavy duty filling

Heavy-duty filling valve

Shower valve brass (Heavy type) Pop up, with the possibility of filling (hot/cold), vertical stop and Brass plug ø72mm.
Heavy-duty brass bathtub Pop-up valve with possibility of filling (hot/cold) water, having vertical standby piping and a ø72mm Brass cover.

Dimension/Length: **45-55cm** 05183
81-90cm 05416

Color/Color: **Chrome/Chrome**

Siphon/Drain pipe 03227

Chrome
Chrome

Gold

Gold
Matt

Bronze
Bronze

White/White
Gloss

Machine Translated by Google

Economical automatic

Automatic valve, economy line

Vertical standby polypropylene bath valve, with flexible overflow hose, cable actuation and ABS plug ø72mm.
Polypropylene bathtub valve with vertical standby piping and flexible overflow pipe, a set screw enabling movement and a ø72mm ABS cover.

Dimension/Length: **45-55cm**

Color/Color:		
	Chromé/Chrome	03623
	White/White Gloss	05945
	White/White Matte	05946
	Brushed/Brushed Nickel	05887
	Black/Black Matte	06073

Siphon/Drain pipe 03227

Economic Pop-up

Pop-up valve, economy line

Vertical standby polypropylene shower valve, with overflow hose and ABS plug ø72mm with Pop up system.
Polypropylene bathtub valve with vertical standby piping and flexible overflow pipe, and a ø72mm pop-up ABS cover.

Dimension/Length: **81-125cm**

Color/Color:

Chrome 06603 **White Gloss** 06619 **White Matte** 06074
Black Matte 06075

Gold/Gold Matte 06695
Gold Gloss 06672
Bronze/Bronze 06673
Gun Metal 06639

Siphon/Drain pipe 03227

Payment economic Pop-up

Pop-up filling valve, economy line

Shower valve brass (Heavy type) Pop up, with the possibility of filling (hot/cold), vertical stop and Brass plug ø72mm.
Polypropylene bathtub valve with possibility of filling water, having vertical standby piping & flexible overflow pipe, and a ø72mm pop-up Brass cover.

Dimension/Length: **45-80cm**

Color/Color:		
	Chromé/Chrome	05250
	Black/Black Matte	06195
	Bronze/Bronze	06348

Dimension/Length: **81-125cm**

Color/Color:		
	White/White Matte	06632
	Chrome/Chrome	06171
	Black/Black Matte	05630

Siphon/Drain pipe 03227

White/White Matt · **Black/Black Matt** · **brushed/ Brushed Nickel** · **Gun Metal**

Machine Translated by Google

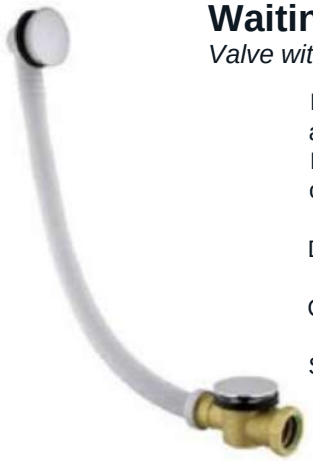

Waiting sideways

Valve with lateral standby piping

Polypropylene bath valve with side brass stop, flexible overflow hose and Brass plug ø72mm with Pop up system.
Polypropylene bathtub valve with lateral standby brass piping & flexible overflow pipe and a ø72mm pop-up Brass cover.

Dimension/Length: **45-80cm** 04231

Color/Color: **Chrome/Chrome**

Siphon/Drain pipe 05190

Stainless (Inox) Pop-up

Stainless steel (INOX) Pop-up valve

Polypropylene bath valve with AISI 316 stainless steel finish, vertical stop, with overflow hose and Brass plug ø72mm with Pop up system.

Polypropylene bathtub valve with AISI 316 stainless steel finish, vertical standby piping & flexible overflow pipe, and a ø72mm pop-up Brass cover.

Dimension/Length: **45-125cm** 05470

Color/Color: AISI 316 STAINLESS STEEL

Siphon/Drain pipe 03227

Filling stainless (Inox) Pop-up

Stainless steel (INOX) Pop-up filling valve

Polypropylene bath valve with AISI 316 stainless steel finish, fillable, vertical standby, with flexible overflow hose and Brass plug ø72mm with Pop up system.
Polypropylene bathtub valve with AISI 316 stainless steel finish, with possibility of filling water, having vertical standby piping and flexible overflow pipe, and a ø72mm pop-up Brass cover.

Dimension/Length: **45-125cm** 05471

Color/Color: AISI 316 STAINLESS STEEL

Siphon/Drain pipe 03227

Machine Translated by Google

Economic Pop-up

Pop-up valve, economy line

Vertical standby polypropylene shower valve, with overflow hose and ABS plug ø72mm with Pop up system.
Polypropylene bathtub valve with vertical standby piping & flexible overflow pipe, and a 72mm pop-up ABS cover.

Dimension/Length: **60-90cm** 01620

Color: **Chrome/Chrome**

Siphon/Drain pipe 03227

Hidden overflow

Concealed overflow valve

Vertical standby polypropylene shower valve, with semi-flexible overflow pipe, drainage system based on the principle of communicating vessels and ABS plug ø72mm with Pop up system.
Polypropylene bathtub valve with hidden overflow opening and semi-flexible pipe, a drainage system based on the principle of communicating vessels and a ø72mm pop-up ABS cover.

Dimension/Length: **46-58cm** 01621

Color: **Chrome/Chrome**

Siphon/Drain pipe 05190

Mouth connection siphon

Bathtub drain pipe for floor installation

PRODOTTO IN ITALIA

Low profile ABS connection siphon for ø40/50mm mouth valve connection.
Low profile drain pipe of ABS connection for floor installation by a ø40/50mm valve.

Material/Material: **ABS**

Color/Color: **Black/Black**

Concealed overflow valve 03227
Concealed overflow valve

Siphon for hydromassage valve

Drain pipe for hydromassage valve

PRODOTTO IN ITALIA

ABS connection siphon ø40/50mm for valves of hydromassage systems.
Drain pipe of ABS connection for ø40/50mm valves of hydromassage systems.

Material/Material: **ABS**

Color/Color: **Black/Black**

Concealed overflow valve 05190
Concealed overflow valve

Machine Translated by Google

Machine Translated by Google

batteries.

faucets

193

Floor/Freestanding

Deck mounted

Machine Translated by Google

K-900.

Oval waterfall of the Italian house Cristina with thermostatic control, detachable shower & selector, connected to the drain valve.

Oval waterfall of the Italian company Cristina with mixing faucet, detachable shower head & diverter, connected to the bathtub drain valve.

Dimensions: **12x17x8cm**

Color/Color: **Chrome/Chrome** 06058

CRISTINA

K-600.

Rectangular waterfall with thermostatic control, detachable shower, selector.

Rectangular waterfall with mixing faucet, detachable shower head & diverter.

Dimensions: **12x23x9cm**

Color/Color: **Chrome/Chrome** 02916

CRISTINA

K-500.

Rectangular waterfall of an Italian house, with thermostatic control, detachable shower and selector.

Rectangular waterfall of Italian company with mixing faucet, detachable shower head & diverter.

Dimensions: **7.5x13.5x1cm**

Color/Color: **Chrome/Chrome** 03891
Black/Black 05347

PRODOTTO IN ITALIA

Machine Translated by Google

K-300.

Oval waterfall of an Italian house with thermostatic control, detachable shower and selector.

Oval waterfall of Italian company with mixing faucet, detachable shower head & diverter.

Dimensions: **14x16x4cm**

Color/Color: **Chrome/Chrome** 00400

PRODOTTO IN ITALIA

K-301.

Oval waterfall of an Italian house with thermostatic control, detachable shower and selector.

Oval waterfall of Italian company with mixing faucet, detachable shower head & diverter.

Dimensions: **11x17x5cm**

Color/Color: **Chrome/Chrome** 06621

PRODOTTO IN ITALIA

The above batteries have the possibility of changing the spiral, through the extension from the upper side. / The above faucets enable the user to change the shower hose through its extension from the upper side.

04321

Shower drainage system

Shower drainage

CGS

Installed on shower mixer taps, collecting the excess water of the spiral & connected to the drainage valve drain.
Compatible only with polypropylene valves.

It is installed on deck mount shower faucets, collecting excess water from the shower hose & it is connected to the drain valve.
It is combined only with polypropylene valves.

Machine Translated by Google

J-4BB.

Italian-made thermomix faucet with spout (11.8cm height) with 16cm flow distance, detachable shower and selector.

Mixing faucet of Italian company with a tub spout (11.8cm high) having a 16cm center distance, a detachable shower head & diverter.

Color/Color: **Black/Black** 06627

PRODOTTO IN ITALIA

J-411.

Italian-made thermomix faucet with spout (11.8cm height) with 16cm flow distance, detachable shower and selector.

Mixing faucet of Italian company with a tub spout (11.8cm high) having a 16cm center distance, a detachable shower head & diverter.

Color: **Chrome** 06560

PRODOTTO IN ITALIA

04321

Shower drainage system

Shower drainage

CGS

Installed on shower mixer taps, collecting the excess water of the spiral & connected to the drainage valve drain.
Compatible only with polypropylene valves.

It is installed on deck mount shower faucets, collecting excess water from the shower hose & it is connected to the drain valve.
It is combined only with polypropylene valves.

Machine Translated by Google

Lusitano L-200.

Surface-mounted thermomixing mixer with selector and detachable shower, for combination with a faucet (filling) valve or with a floor outlet or with a wall-mounted waterfall or ceiling shower.

Deck mount mixing faucet with diverter and detachable shower head for combination with a (filling) valve or a freestanding spout or a wall-mounted waterfall or a ceiling shower.

Color: **Chrome** 04933

BRUMA FLOWINGART

Lusitano L-100.

Thermomix mixer by Bruma with spout (27.4cm height) with 11.3cm flow distance, detachable shower head and selector.

Mixing faucet of the Bruma company with a tub spout (27.4cm high) having a 11.3cm center distance, a detachable shower head & diverter.

Color: **Chromé/Chrome** 04991

BRUMA FLOWINGART

Lusa L-120.

Thermomix mixer by BRUMA with spout (15.6cm height) with 22cm flow distance, detachable shower head and selector.

Mixing faucet of the Bruma company with a tub spout (15.6cm high) having a 22cm center distance, a detachable shower head & diverter.

Color: **Chrome** 06620

BRUMA FLOWINGART

The above Bruma batteries are also available upon order in the following colors
The above Bruma faucets are also available upon order in the following colors:

Night Sky
(black mat)

Pure White
(matte white)

Sunrise
(matte gold)

Morning Mist
(brushed nickel)

Gun Metal

Machine Translated by Google

T-7511.

Thermomix floor vertical mixer 79.7cm high Italian made with spout with a flow distance of 22.5cm, mixer and shower.

Freestanding mixing faucet (79.7cm high) of Italian company with a vertical spout of 22.5cm center distance, a mixer & a shower head.

Color: **Chrome** 06628

T-75BB.

Thermomix floor vertical mixer 79.7cm high Italian made with spout with a flow distance of 22.5cm, mixer and shower.

Freestanding mixing faucet (79.7cm high) of Italian company with a vertical spout of 22.5cm center distance, a mixer & a shower head.

Color/Color: **Black/Black** 06629

PRODOTTO IN ITALIA

T-7711.

Thermo-mixing floor curved faucet 97cm Italian made with spout 21.1cm flow distance, mixer and shower.

Freestanding mixing faucet (97cm high) of Italian company with a curved spout of 21.1cm center distance, a mixer & a shower head.

Color: **Chrome** 06630

T-77BB.

Thermo-mixing floor curved faucet 97cm Italian made with spout 21.1cm flow distance, mixer and shower.

Freestanding mixing faucet (97cm high) of Italian company with a curved spout of 21.1cm center distance, a mixer & a shower head.

Color: **Black** 06631

PRODOTTO IN ITALIA

Machine Translated by Google

Lusitano.

Bruma vertical floor faucet with faucet and chrome shower.

Freestanding vertical faucet of the Bruma company with a mixer and a chrome shower.

Color: **Chrome** 05005

BRUMA

Lusa.

Bruma curved floor faucet with chrome mixer and shower.

Freestanding curved faucet of the Bruma company with a mixer and a chrome shower.

Color: **Chrome** 05085

BRUMA

Lusa L-320.

Floor-standing shower spout by Bruma. It is necessary to connect with a mono-command or the combination with the L-200 battery is recommended.

Floor-standing shower spout by Bruma. It is necessary to connect with a single-lever mixer or the combination with the L-200 faucet is recommended.

Color: **Chrome** 04896

BRUMA

The above Bruma batteries are also available upon order in the following colors
The above Bruma faucets are also available upon order in the following colors:

Night Sky
(black mat)

Pure White
(matte white)

Sunrise
(matte gold)

Morning Mist
(brushed nickel)

Gun Metal

Machine Translated by Google

Machine Translated by Google

Wall Waterfall.

Wall mounted Waterfall Faucet.

Dimensions: **20x14 1/2”** Weight:
1.98kg

Color/Color: **Chrome/Chrome** 04277

PRODOTTO IN ITALIA

Perched Waterfall.

Deck mounted Waterfall Faucet.

Dimensions: **20x14 1/2”**
Weight: **2.58kg**

Color/Color: **Chrome/Chrome** 05970

PRODOTTO IN ITALIA

Machine Translated by Google

acrilan

hydrotherapy.

hydrotherapy

ACRILAN products enable you to take advantage of the rejuvenating properties of water, combined with the beneficial effects of aromatherapy, ozone therapy and color therapy. The so-called alternative therapies, which are a source of well-being and mental balance. The full compliance of the ACRILAN bathtub with the requirements of the European Directives (CE) and its ISO9001 certified manufacturing processes, guarantee and ensure its top quality.

ACRILAN products enable you to take advantage of the revitalizing properties of water, combined with the beneficial effects of aromatherapy, ozone therapy and chromotherapy. These alternative therapies are a source of well-being and mental balance. Full compliance of ACRILAN tubs with the requirements of European Directives (CE) and ISO9001 certified manufacturing process guarantee and ensure top quality.

Machine Translated by Google

- Eco Basic pneumatic
  Pneumatic Eco Basic
- Pneumatic No. 1
  Pneumatic No. 1
- Pneumatic No. 2
  Pneumatic No. 2
- Pneumatic air massage
  Pneumatic air massage
- Disinfection system
  Disinfection system
- LED lighting systems
  LED light system
- Touch Hydro / Hydro-Aero
- Sound System
  Sound System
- Touch Hydro Slim Light NEW
- Water temperature maintenance system
  Water temperature maintenance

203203

Machine Translated by Google

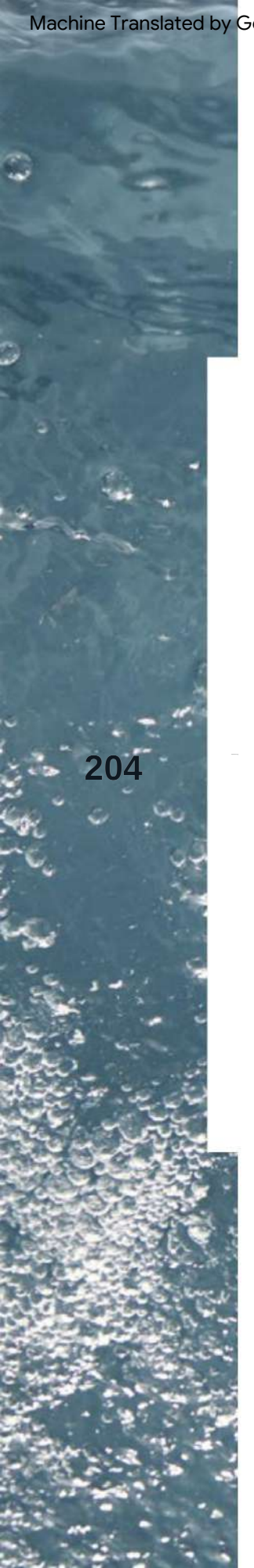

acrilan

Eco Basic pneumatic.

Eco Basic pneumatic system

- air control button - air control
  air button - air control panel
- 6 directed water-air jets
  6 guided air-water jets
- 0.92 HP pump with automatic drain
  CLASS IP X5
  pump 0.92 HP with automatic drainage
  CLASS IP X5
- suction with safety valve
  suction with a safety valve
- pop up eco drain valve *pop-up eco drain valve*
- wiring and safety panel
  wiring and safety panel
- automatic thermal switch (pause at 20")
  automatic thermal switch (20" pause)
- water level sensor
  water level sensor
- support base
  support base
- wall support angles
  wall mount angle brackets

Color: **Chrome** 00464

Ideal for hotel use

PRODOTTO IN ITALIA

acrilan

Spiritual No. 1.

No. 1 pneumatic

- control air button - air control *air button - air control panel*
- 6 adjustable water-air jets
  6 guided air-water jets
- suction with safety valve
  suction with a safety valve
- 1.1 HP pump with a safety valve, of automatic drainage CLASS IPx5 *1.1 HP pump with safety valve of automatic drainage CLASS IP X5*
- anti-vibration pump safety system
  anti-vibration pump system
- drainage *pump drainage*
- pop-up drain valve
  pop-up drain valve
- connection and safety panel
  wiring and safety panel
- automatic thermal switch (pause at 20")
  automatic thermal switch (20" pause)
- water level sensor
  water level sensor
- perimeter base
  perimeter base
- wall mounting angles
  wall mount angle brackets

Color: **Chrome** 00461

All visible parts are available in the colors below / All visible parts are available in the colors below:

00698	06674	00465	06675	00460
Gold Gloss	**Gold Matt**	**Bronze/ Bronze**	**Black/black Matt**	**White/White Matt**

Machine Translated by Google

acrilan

Pneumatic No. 2.

No. 2 pneumatic

- 1 air button extra slim with the possibility of being placed on the vertical side
  1 extra slim air button that can be placed on the vertical side
- 2 air control extra slim with the possibility of being placed on the vertical side
  2 extra slim air control panels that can be installed on the vertical side
- 8 CLENDA ø65mm water-air adjustable Slim Jets, combination of 2 groups
  8 adjustable slim air-water jets CLENDA ø 65mm, combination of 2 groups
- Extra slim suction with safety valve
  extra slim suction with a safety valve
- 1.5HP pump, CLASS IP X5
  pump 1.5 HP, CLASS IP X5
- Anti-vibration pump safety system
  anti-vibration pump system
- *Pump drainage* system
- Automatic drain valve, connected to the pump for complete drainage
  automatic drain valve connected to the pump for full drainage
- Wiring and safety panel
  wiring and safety panel
- Automatic thermal switch for 20” pause
  automatic thermal switch for 20” pause
- Water level sensor
  Water level sensor
- Cleaning system with disinfection tablets
  cleaning system with disinfectant tablets
- Disinfection tablets
  disinfectant tablets
- Perimeter base
  perimeter base
- Wall mounting angles
  wall mount angle brackets

Color: **Chrome** 00466

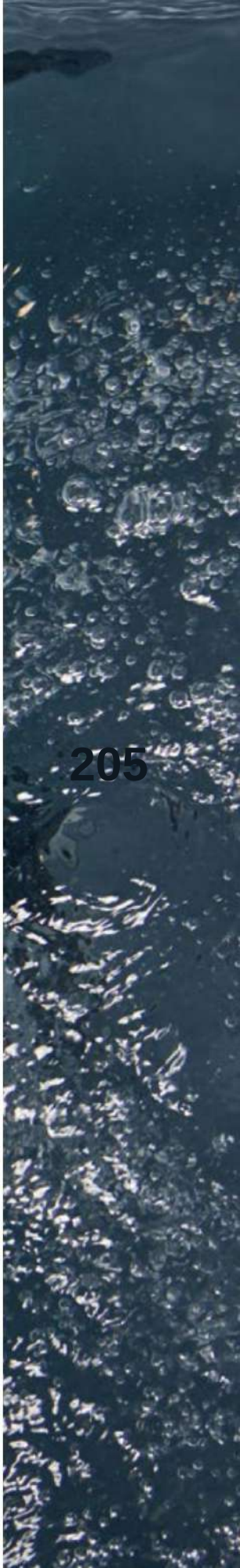

OPTIONAL SELECTION / OPTIONAL:

Selection of bent tube for Hydromassage

The following Jets are placed in Hydromassage No. 2 and in all electronic systems.
The following jets are installed in Hydromassage No 2 and in all electronic systems.

CLENDA SLIM CENTRO

High-performance air-water mixing jet of adjustable direction, with removable cover of 65mm diameter.
High-performance air-water mixing jet of adjustable direction, with a removable cover of 65mm diameter.

CLENDA SLIM SWIRL

Rotary hydrotherapy jets designed to offer pulsating massage with a removable cover of 65mm diameter.
Rotary hydrotherapy jets designed to offer pulsating massage with a removable cover of 65mm diameter.

Machine Translated by Google

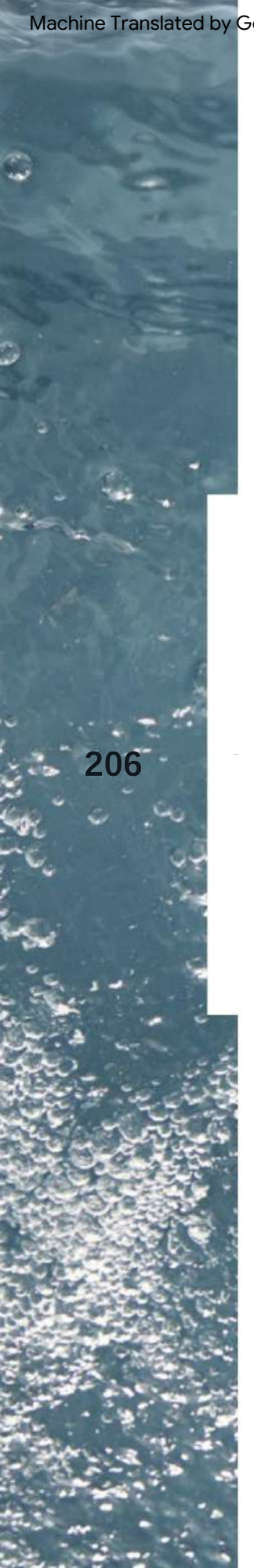

acrilan

Pneumatic air massage.

Pneumatic air massage system

- Blower with anti-vibration feet 1050W (750W blower + 300W air heater)
  1050W blower with anti-vibration feet (750W blower & 300W air heater)
- 12-16 air massage jets if n dimension of the bathtub allows it
  12-16 aeromassage jets if the bathtub dimensions allow their installation
- Wiring and safety panel
  wiring and safety panel
- 1 air button extra slim with can be placed on a vertical side
  1 extra slim air button that can be placed on the vertical side
- Perimeter base
  perimeter base
- Wall mounting angles
  wall mount angle brackets

The air massage system can be installed independently or in combination with one of the pneumatic hydromassage systems.
The aeromassage system can be installed separately or in combination with one of the pneumatic hydromassage systems.

Color: **Chrome** 00491

01910

Disinfection system.

Disinfection System

With chlorine tablets.

- It is neutral in pH and suitable for all scales of water hardness.
  It is pH neutral and suitable for all water hardness scales.
- Offered in a package containing 50 chlorine tablets.
  It is offered in a package containing 50 chlorine tablets.
- Possibility of application in pneumatic hydromassage systems.
  Can be applied to all pneumatic hydromassage systems.
- Integrated disinfection in the pneumatic hydromassage No2.
  Integrated disinfection in the pneumatic hydromassage No2.

All systems require a visit and ventilation port (p. 220).
An access and ventilation port is required in all systems (p. 220).

Machine Translated by Google

acrilan

LED lighting systems.

LED Lighting Systems

White LED projector system with autonomous On-off control — 05261
White LED projector system with independent On-off controller

Color therapy system with 1 LED projector — 04494
Color therapy system with 1 LED projector

Includes / Equipped with:

- LED color therapy with 11 available colors and 5 programs.
  LED color therapy system with 11 available colors & 5 programs.
- keep or automatically change colors
  color maintenance or automatic color change
- on/off button
  on/ off button
- wiring and security panel
  wiring and safety panel

Color Change Programs

ENERGY	Red / Orange / Yellow / White / Yellow / Orange *Red / Orange / Yellow / White / Yellow / Orange*
TONIC	Yellow / Red / Green *Yellow / Red / Green*
RELAX	Blue / Green / White / Green *Blue / Green / White / Green*
SUN	Yellow / Orange / Yellow / Blue / Yellow / White *Yellow / Orange / Yellow / Blue / Yellow / White*
DREAM	Green / Blue / Light Blue / White / Orange / Red / Purple *Green / Blue / Light Blue / White / Orange / Red / Purple*

The switching seconds depend on your program of choice.
The color change seconds depends on the program of your choice.

Machine Translated by Google

acrilan

Electronic Touch Hydro.

Touch Hydro electronic system

- Glass, digital, illuminated touch controller, 4 functions
  Digital, glass, illuminated touch panel, 4-functions
- Increased air supply, with solenoid valve
  air supply fluctuation with an electric valve
- 8 adjustable water-air Slim Jets CLENDA ø65mm, combination of 2 groups
  8 adjustable slim air-water jets CLENDA ø65mm, combination of 2 groups
- Extra slim suction with safety valve
  extra slim suction with a safety valve
- 1.5HP pump, CLASS IP X5
  pump 1.5 HP, CLASS IP X5
- Anti-vibration pump safety system
  anti-vibration pump system
- *Pump drainage* system
- Automatic drainage valve, connected to the pump for complete drainage
  automatic drain valve connected to the pump for full drainage
- Wiring and safety panel
  wiring and safety panel
- Automatic thermal switch for 30” pause
  automatic thermal switch for 30” pause
- Water level sensor
  water level sensor
- LED color therapy with 11 color changes
  LED color therapy with 11 color changes
- Electronic cleaning system with digital display
  electronic cleaning system, with digital display
- Disinfectant liquid
  disinfectant liquid
- Perimeter base
  perimeter base

Color/Color: **Chromé/Chrome** 05123

acrilan

Electronic Touch Hydro-Aero.

Touch Hydro-Aero electronic system

It consists of the full Touch Hydro Premium electronic system, combined with the following Aeromassage elements .

- Blower with anti-vibration feet 1050W (750W blower + 300W air heater)
  1050w blower with anti-vibration feet (750w blower & 300w air heater)
- 12-16 air massage jets if the size of the bathtub allows it
  12-16 aeromassage jets if the bathtub dimensions allow their installation

Color/Color: **Chromé/Chrome** 05124

06045

Sound System.

Sound System

Includes two 8ÿ/15W piezoelectric speakers, connection box and Bluetooth.
Factory pre-installation is required.
It includes two piezoelectric speakers 8ÿ/15W, power supply junction box and Bluetooth.
Factory pre-installation is required.

Machine Translated by Google

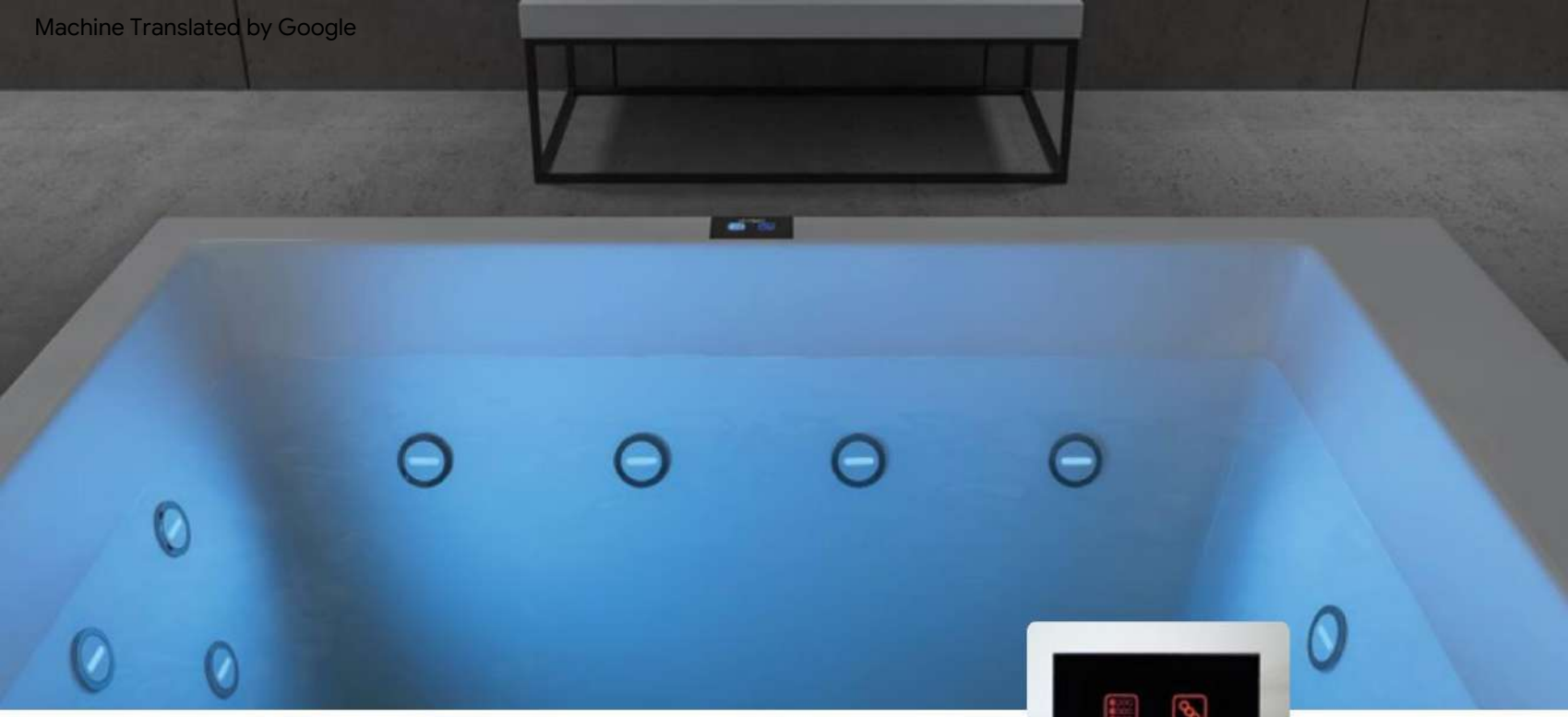

acrilan

Touch Hydro Slim Light.

- Glass, digital, illuminated touch control, 2 functions
  Digital, glass, illuminated touch panel, 2-functions
- Increased air supply, with solenoid valve
  air supply fluctuation with an electric valve
- 6 illuminated water-air jets
  6 backlit air-water jets
- Slim suction with safety valve
  slim suction with a safety valve
- 1.1HP pump with safety valve, automatic drainage CLASS IPx5
  pump 1.1 HP with safety valve of automatic drainage CLASS IP X5
- Anti-vibration pump safety system
  anti-vibration pump system
- POP UP drainage valve
  pop-up drain valve
- Wiring and safety panel
  wiring and safety panel
- Automatic thermal switch (pause at 20”)
  automatic thermal switch (20” pause)
- Water level sensor
  water level sensor
- Perimeter base
  perimeter base
- Wall mounting angles
  wall mount angle brackets

Color:	**Chrome**	06678
	Gun metal	06679

Water temperature maintenance system.

Water temperature maintenance system

1.5 Kw or 3 Kw heater, depending on the capacity and dimensions of the bathtub. Can be applied to all hydromassage systems.
1.5 Kw or 3 Kw heater, depending on the capacity and dimensions of the bathtub. Can be applied to all hydromassage systems.

	1.5 kW	**3kW**
Heater LED ON/OFF	02930	00864

Machine Translated by Google

Machine Translated by Google

acrilan

Cleaning & Decontamination.

hydromassage systems

Hydromassage systems cleaning & disinfection

211

Disinfect and maintain the hot tub with approved products, which guarantee hygienic conditions and good operation of your device.

Disinfect and maintain the hot tub with approved products, which guarantee hygienic conditions and the good operation of your device.

more than just clean!

PRODOTTO IN ITALIA

Machine Translated by Google

04952

Idrosanit.

1L

Disinfectant liquid for electronic hydromassage systems.
Disinfectant & antibacterial product with cleaning action of the water inside the bathtub. Ideal for maintaining hot tubs. It works inside the piping, pumps and hydroelectric installations of the hot tub. Effectively prevents the creation of fungi and bacteria. Suitable for electronic hydromassage systems containing a dosing container.

Liquid disinfectant for electronic hydromassage systems.
Disinfectant & antibacterial product by cleaning the water inside the bathtub. It's ideal for maintaining hot tubs. It disinfects inside the piping, pumps and hydroelectric installation of the hot tub. It effectively prevents the creation of fungi and bacteria.
Suitable for electronic hydromassage systems with a dosing container.

04948

Idronet.

500 ml

Hydromassage disinfectant cleaning liquid.
Cleaning and disinfection product for hydromassage systems. It acts inside pipes, pumps and hydroelectric devices against the formation of fungi, bacteria and fatty substances. Does not produce foam.
Applies to all hydromassage systems.

Liquid disinfectant & cleaning product for hydromassage systems.
Cleaning and disinfectant product for hydromassage systems. It disinfects inside the pipes, pumps and hydroelectric devices against the formation of fungi, bacteria and oily residue. It doesn't produce foam.
Suitable for all hydromassage systems.

Machine Translated by Google

01346

Disinfection tablets.

50 pc

Disinfection tablets.

Disinfectant based on chlorine, which prevents the creation of bacteria and fungi.
Recommended for hydromassage systems No. 2.

Disinfectant tablets.

Disinfectant tablets based on chlorine, they prevent the creation of bacteria and fungi.
Recommended for hydromassage systems No. 2.

05774

Idronet Shock.

1L

213

Disinfectant Treatment (Shock).

It is a product designed for the thorough and particularly energetic cleaning of hydromassage systems. It is the ideal product when the level of pollution and organic contamination cannot be removed with a normal disinfectant. It works effectively by removing entrapped organic residue and limestone deposits. Thoroughly cleans the hydromassage system pipes, electric pump and elements in contact with water, renewing the system and making it healthy and fit for use again.

Disinfectant Treatment Shock.

It is a product designed for the thorough and particularly effective cleaning of hydromassage systems. It is the ideal product when the level of pollution and organic contamination cannot be removed with a usual disinfectant. It works effectively by removing the entrapped organic residue and limestone deposits. It thoroughly cleans the system pipes, the electric pump and all the elements getting in contact with water, thus renewing the system and making it totally clean and fit for use again.

Machine Translated by Google

05194

DF50.

500 ml

Descaler.
Descaling product with super concentrated action. Removes salts quickly and effectively without damaging or corroding surfaces.

Ideal product for the maintenance of acrylic surfaces (ceiling shower - hand shower - batteries and hydromassage jets).

Descaling product.
Descaling product with ultraconcentrated formula. It removes salts quickly and effectively without damaging or corroding the surfaces. Ideal product for the maintenance of acrylic surfaces (ceiling shower - hand shower - batteries and jet hydromassage).

04997

Detergent.

500 ml

Liquid cleaner for acrylic surfaces.
Innovative product that cleans and disinfects the acrylic surfaces of the bathtub without scratching.
Its special composition in gel form works in depth, removing organic residues and salts, keeping the gloss and color of the acrylic surface unchanged.

Liquid cleaning product for acrylic surfaces.
Innovative product that cleans and disinfects the acrylic surfaces of the bathtub without scratching it.
Its special gel form cleans in depth, by removing all organic residues and salts, while keeping intact the gloss and color of the acrylic surface.

Machine Translated by Google

04814

CleanUp.

500 ml

Velor liquid cleaner.
Neutral cleaning product with disinfectant action, for sensitive surfaces.
Thanks to its special composition with a neutral PH, it works gently without wearing down the surfaces, even the most sensitive ones, having an effective cleaning action against greasy substances.
The ammonium salts present in Clean Up give a strong disinfecting and bactericidal effect, able to prevent the appearance of bacteria and microorganisms, making the surfaces perfectly clean and sterile.

Velor Liquid cleaner.
Neutral cleaning & disinfectant product for sensitive surfaces.
Thanks to its special composition with a neutral PH, it works gently without damaging the surfaces, even the most sensitive ones, while having an effective cleaning action against greasy residue.
The ammonium salts of CLEAN UP give a strong disinfecting and bactericidal effect, able to prevent the appearance of bacteria and microorganisms, making the surfaces perfectly clean and sterile.

04949

DT33.

500 ml

Crystal cleaning liquid.
Cleaning & protective product during the formation of scales and stains. It creates a surface that protects the crystal from salty sediments. Cleaning the shower cabin will be much easier, faster and less frequent.

Crystal cleaning liquid.
Cleaning & protective product against the formation of scales and stains. It creates a surface that protects the crystal from salty sediments. Cleaning the shower cabin will be much easier, faster and less frequent.

Machine Translated by Google

Machine Translated by Google

installation & repair

installation & repair

- Flexible / fixed joint cover
  Cover strip flexible/ fixed
- Bath support set
  Bathtub support kit
- Wall-mounted support corners
  Wall mount angle brackets
- Visit & ventilation louver
  Access panel & ventilation vent
- Tile visit set
  Access panel

kit • Bath handle
Bathtub handle

- Repair set / Polishing ointment
  Repair kit / Polishing cream

Machine Translated by Google

00910

Flexible joint cover.

Flexible Cover Strip

Application after installing the bathtub. Ideal for circular surfaces or boxes.
Application after the installation of the bathtub. Ideal for circular surfaces or boxes.

Material: **soft PVC**

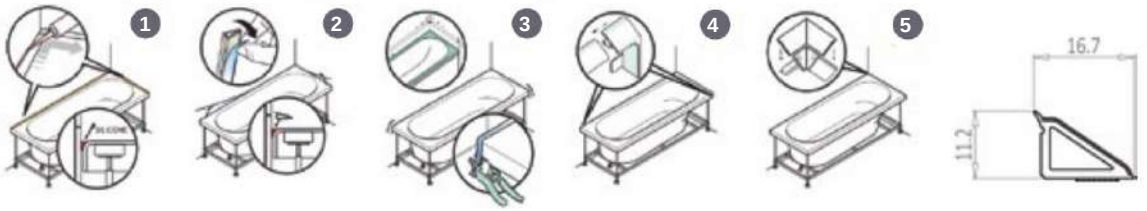

It includes / It includes:

- 4m joint cover / 4m Cover strip
- 2 connection angles / 2 mount angle brackets
- 2 ends for the 2 edges of the cover strip

00885

Fixed joint cover.

Fixed Cover Strip

Application together with the installation of the bath. Ideal for insulation between the tile and the bathtub.
Application together with the installation of the bathtub. Ideal for insulation between the tile and the bathtub.

Material: **soft PVC.**

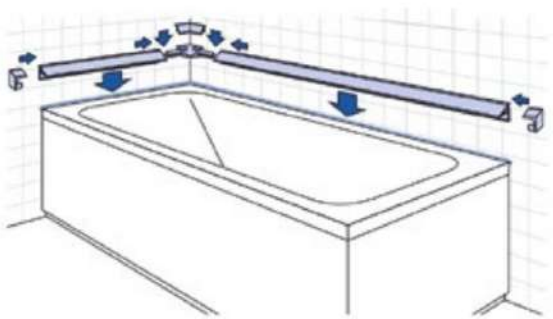

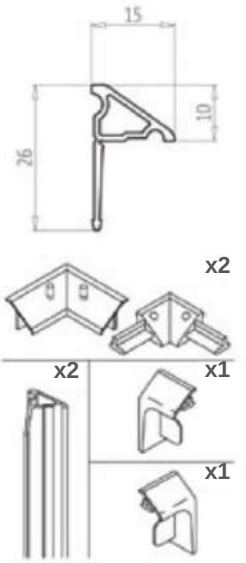

It includes / It includes:

- 2 rods 1.95m / 2 bathtub liners 1.95m
- 2 connection angles / 2 mount angle brackets
- 2 ends for the edges of the cover strip

Machine Translated by Google

01540

Bath support set.

Bathtub support kit

It includes / It includes:
- 2 galvanized rods / 2 galvanized bathtub liners
- wood screws
- height adjusters
- 2 wall mounting angles / 2 wall mounts angle brackets
- coach screws

Support kit / Support kit (Made in Germany). 04358
- galvanized metallic support / galvanized metallic support
- anti-slippery height regulators 13-21cm

00812

Wall mounting angles.

Wall mount angle brackets

Support angles (2 pieces) for the wall with their rings.
Wall mount angle brackets (2 pieces) with their coach screws.

06708

Waterproofing set.

MEPA

Waterproof kit •
safe and permanent sealing / safe and permanent sealing
- Sound-absorbing support / sound components absorbing mounting components
- tightness certified

It includes / It includes:
- 1 roll of tray sealing tape Aquaproof (4m) / 1 roll of tray sealing tape Aquaproof (4m)
- 1 roll of sound insulation tape (4m) / 1 roll of sound insulation tape (4m)
- 1 roll of tile separation tape (4m) / 1 roll of tile separation tape (4m)

Suitable for installation on undermount bathtubs too.

Machine Translated by Google

01542

Tile visit set.

Access panel kit

System with magnets and invisible closure of accessible openings. Its placement is adapted to any size and type of tile.

Magnet system and invisible closing of access panels. It can be placed on any size and type of tile.

01271

Visit & ventilation louver.

Access panel & Ventilation vent

White/White 0.34x0.40m

Galvanized frame (frame) for easy installation on tiles. With magnetic closure / Galvanized frame for easy installation on tiles. With magnetic closure.

Bath handle.

Bathtub handle

02460

Dimension/ Material: **21.5cm** (2pcs/pcs)

Material: **Chrome plated BRASS**

02461

Dimension/ Material: **16cm** (2pcs/pcs)

Material: **Chrome plated ABS**

Possibility of changing with Allen key set.

Corner shelf.

Bathtub corner shelf

Dimensions: **1.40x0.28m** 00354

0.69 x 0.30m 00357

Material/Material: **ABS**

Placement in a corner, for storing bathroom products.

Corner installation, for storing bathroom products.

Machine Translated by Google

00775

Repair kit.

Repair kit

Apply to bumps that require filling & painting of the acrylic bathtub & shower. Includes: putty, desiccant, sandpaper & spray acrylic paint.

For applying to cracks that require filling & painting of the acrylic bathtub & shower. It includes putty, drying agent, sandpaper & acrylic paint spray.

00651

Polishing ointment.

Polishing cream

Repair application to minor abrasions & bumps. Restores the gloss to its original form. Includes 100ml tube & 800 & 1200 grit sandpaper.

For applying to minor abrasions & bumps. It restores the gloss to its original form. It includes 100ml tube & 800 & 1200 grit sandpaper.

Machine Translated by Google

Machine Translated by Google

acrilan

showers

shower trays

Highly aesthetic showers, which will upgrade your bathroom with their quality and functionality.

Highly aesthetic shower trays, which will upgrade your bathroom with their quality and functionality.

Machine Translated by Google

Machine Translated by Google

Slim.

Slim shower series, height 5cm to 3.5cm for face or above floor installation. Available in Gloss white and in 5 matte colors. The valve that fits the Slim showers is ø90. With siphon or vertical drain.

Slim shower trays range, from 3.5cm to 5cm high for in or above floor installation. They are available in white Gloss and 5 matte colors. The ø90 valve fits the Slim shower trays. With bent tube or vertical drain.

	White/White Gloss	Velor Matte
1.60x0.80x0.05	04153	04816
1.40x0.80x0.05	04141	04755
1.20x0.80x0.05	04142	04526
1.00x0.80x0.05	04191	04690
1.70x0.70x0.05	04691	04928
1.50x0.70x0.05	04680	04675
1.20x0.70x0.05	04504	04698

Chrome Slim valve.

Slim Chrome Valve

Suitable for the Slim showers.

301-302

Slim ø90 eco chrome low profile 60mm 04953
Slim ø90 eco chrome low-profile valve 60mm

Slim ø90 CGS 95mm vertical 60lit/min 05249
Slim ø90 CGS 95mm vertical valve 60lit/min

ANTHRACITE GRAY VELOR | **BEIGE VELOR** | **LIGHT GRAY VELOR** | **WHITE VELOR** | **WHITE GLOSS** | **BLACK VELOR**

Machine Translated by Google

Beige Rectangles.

Beige Rectangle shower tray

303

Rectangular shower with stone texture. ø90 valve is fitted.
A rectangular shower tray with stone texture. A ø90 valve is fitted.

Dimensions: **150x80x5cm** Depth: **2cm** 05576

Color/Color: **Beige**

Fossato.

Rectangular shower with channel around the perimeter and non-slip bottom. ø90 valve is fitted.
A rectangular shower tray with perimetric channel and anti-slip floor. A ø90 valve is fitted.

Dimensions: **160x80x5cm** Color: 05635
White/White Gloss

302

Machine Translated by Google

Square.

Square shower tray

Dimensions: **90x90x4cm** Depth: **2cm** 04350

Dimensions: **80x80x4cm** Depth: **2cm** 05317

Color/Color: **White/White Gloss**

Slim ø90 eco valve, with a low profile of 60mm 04953
Slim ø90 eco & low-profile valve 60mm

303

Corner Slim.

Slim Corner shower tray

Slim corner shower with non-slip bottom. ø90 valve is fitted.
Slim Corner Shower tray with non-slip floor.
A ø90 valve is fitted.

Dimensions: **90x90x5cm** 04056

80x80x5cm 04170

Color/Color: **White/White Gloss**

303

Corner.

Corner shower tray

Shower with a large external facade.
Available with base only.
Shower tray with a large exterior panel.
Available only with base.

Dimensions: **90x90x17cm** Depth: **7cm** 00681

Dimensions: **80x80x17cm** Depth: **7cm** 04030

Color/Color: **White/White Gloss**

Valve/Valve ø50: 04261

303

Machine Translated by Google

06147

Shower column.

Shower column

Stainless steel outdoor shower column ø60, with hot and cold water mixer, concealed shower head and hand shower.

A ø60 stainless steel outdoor shower column with thermostatic mixer, concealed shower set and hand shower head.

Height/height:	**230 cm**
Material/Material:	**Stainless steel Steel AISI 316**
Color/Color:	AISI 316 STAINLESS STEEL

05592

Shower column.

Shower column

Stainless steel outdoor shower column ø50.
A ø50 stainless steel outdoor shower column.

Height/height:	**240 cm**
Material/Material:	**Stainless steel Steel AISI 316**
Color/Color:	**Black/Black**

Machine Translated by Google

06145

Expand system.

The EXPAND outdoor shower system consists of cast acrylic sheet tiles,
34x40 cm, mounted on a custom drain recess.

The EXPAND system consists of molded acrylic sheet tiles, of dimensions 34x40cm, placed onto an adaptable recessed shower drain.

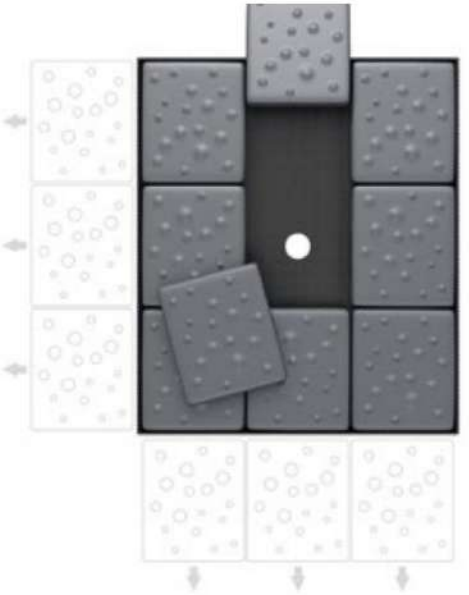

229

Black/Black Velor

Grey Velor

Light Grey/Light Gray Velor

White/White Velor

Machine Translated by Google

Machine Translated by Google

acrilan

grates

drain **grids**

231

PRODOTTO IN ITALIA

Machine Translated by Google

Water captured by the charm of steel

The company Ferplast, based in Italy, has been active in the field since 1970 and produces products of high quality and aesthetics. All products are manufactured without welding in a single piece of AISI 304 stainless steel, which makes them extremely resistant to corrosion and the wear of time. Also, the products are easy to maintain and have an excellent performance in terms of hygiene. All the above features allow the warranty to be extended to 20 years.

The Ferplast company Ferplast, having its headquarters in Italy, has been active in the industry sector since 1970 and it manufactures products of high quality and aesthetics. All its products are manufactured without welding in a single piece of AISI 304 stainless steel, which makes them extremely resistant to corrosion and the damage coming from their use. Also its products are easy to maintain and they have an excellent performance in terms of hygiene. All the above features allow the warranty to be extended to 20 years.

232

The Ferplast patent / The Ferplast patent

TOP VALVE®
Brevettato in Italia

The Top Valve, which can be combined with most grills
Ferplast, consists of two parts: a thermoplastic recyclable ABS body and a silicone membrane, designed to subside with gravity in the normal passage of water. When calm, the Top Valve seals tightly after the flow, preventing unpleasant odors and insects from coming out of the drain, as well as backflow of sewage.

The Top Valve product, which can be combined with most Ferplast grids, consists of two parts: a thermoplastic recyclable ABS main body and a silicone membrane, designed to subside by gravity during regular water flow. When water flow stops, the Top Valve is sealed tightly, thus preventing any unpleasant odors and insects from coming out of the drain, as well as any backflow of sewage.

Advantages / Advantages

• Easy and quick installation and replacement • Easy maintenance and cleaning • Resistance to high temperatures and chemical products • Prevents unpleasant odors, insects and possible water return.
• Profile that does not exceed 7cm

• Easy and quick installation and replacement
• Easy maintenance and cleaning
• Resistance to high temperatures and chemical products
• Prevents unpleasant odors, insects and possible water backflow.
• Profile that does not exceed 7cm.

Machine Translated by Google

Lineardrain In-Tile
2.50 / 2.00 / 1.50 / 0.90 / 0.60 / 0.30 x 0.10m

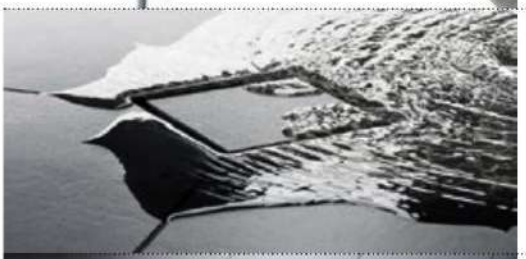

Floordrain In-Tile
0.20x0.20m / 0.15x0.15m / 0.13x0.13m

0.13x0.13m for tile placement vertical drain. 0.103x0.103m for tile installation.

Lineardrain Minimal
0.90x0.10m / 0.60x0.10m / 0.30x0.06m

Minimal
Tile Minimal 0.30x0.10m

Linea Minimal 0.30x0.10m

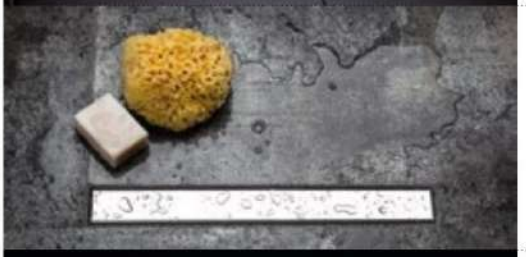

Modular Economy
1.20 / 1.10 / 1.00 / 0.90 / 0.80 / 0.70 / 0.60 / 0.50 / 0.40 / 0.30 /0.20 x 0.04m

Floordrain cover plates
Tile 0.102x0.102m

Floor rack with Click Clack mechanism 0.15x0.15m / 0.10x0.10m

Floor grid 0.10x0.10m

Wall drains
"Wall-mounted" grates in AISI 304 stainless steel. 0.30x0.06 m

Machine Translated by Google

Machine Translated by Google

Lineardrain in-tile.

The Lineardrain In-Tile series for dimensions 2.50x0.10m, 2.00x0.10m, 1.50x0.10m, 0.90x0.10m, 0.60x0.10m, 0.30x0.10m was designed to create a complete effect between the discharge system and the floor. The same version is reversible or accepts tiles where only the slit remains visible.

With TOP VALVE and base, side outlet at ø40 mm and low profile that does not exceed 7cm.
Flow 8L/min or 27L/min (without silicone TOP VALVE).
Without the siphon, vertical outlet at ø51mm.

The Lineardrain In-Tile range for the dimensions 2.50x0.10m, 2.00x0.10m, 1.50x0.10m, 0.90x0.10m, 0.60x0.10m, 0.30x0.10m has been designed to create a complete & effective system between the drain system and the floor. The same version is reversible or can take tiles where only the slit remains visible.
With TOP VALVE and a base, having a side outlet at ø40 mm and low profile not exceeding 7cm.
Flow 8L/min or 27L/min (without the silicone valve TOP VALVE).
Without the bent tube, vertical outlet at ø51mm.

Dimensions: **2.50x0.10m** 06336
2.00x0.10m 06337
1.50x0.10m 06338
0.90x0.10m 04911
0.60x0.10m* 04806
0.30x0.10m 05645

Material: **Stainless steel AISI 304 / AISI 304 Stainless steel**

* The 0.60x0.10 dimension is also available on request with a colored stainless finish, in satin black and gold.
The 0.60x0.10 dimension is also available upon request with a colored stainless finish, in satin black and gold.

06597

06598

Machine Translated by Google

Machine Translated by Google

Floordrain in-tile.

The Floordrain In-Tile series for the dimensions 0.20x0.20m or 0.15x0.15m or 0.13x0.13m, designed to create an integrated effect between the drainage system and the floor. The same version is reversible or accepts tiles where only the slit remains visible.

With TOP VALVE and base, side outlet at ø40mm and low profile that does not exceed 9cm.

The Floordrain In-Tile range for the dimensions 0.20x0.20m or 0.15x0.15m or 0.13x0.13m, which has been designed to create a complete & effective system between the drain system and the floor. The same version is reversible or can take tiles where only the slit remains visible.
With TOP VALVE and a base, having a side outlet at ø40 mm and low profile not exceeding 9cm.

Flow 8L/min or 27L/min (without silicone TOP VALVE).
Without the siphon vertical outlet in ø51mm.
Flow 8L/min or 27L/min (without the silicone valve TOP VALVE).
Without the bent tube vertical outlet at ø51mm
Dimensions: **0.20x0.20m 0.15x0.15m** 05259
04869
0.13x0.13m 05646

Floordrain In-Tile 0.13x0.13m low profile floor drain for laying tile.
Vertical drain ø104mm.
Floor grid Floordrain In-Tile 0.13x0.13m of low profile for installing tiles.
Vertical flow at ø104mm.
Dimensions: **0.13x0.13m** 05688

Floordrain In-Tile 0.103x0.103m grid with siphon and low profile for laying tile. Flow 8L/min or 25L/min (without silicone valve).

Grid Floordrain In-Tile 0.103x0.103m with bent tube and of low profile for taking tile. Flow 8L/min or 25L/min (without the silicone valve).
Dimensions/Dimensions: **0.103x0.103m** 05035

Material: **Stainless steel AISI 304 / AISI 304 Stainless steel.**

Machine Translated by Google

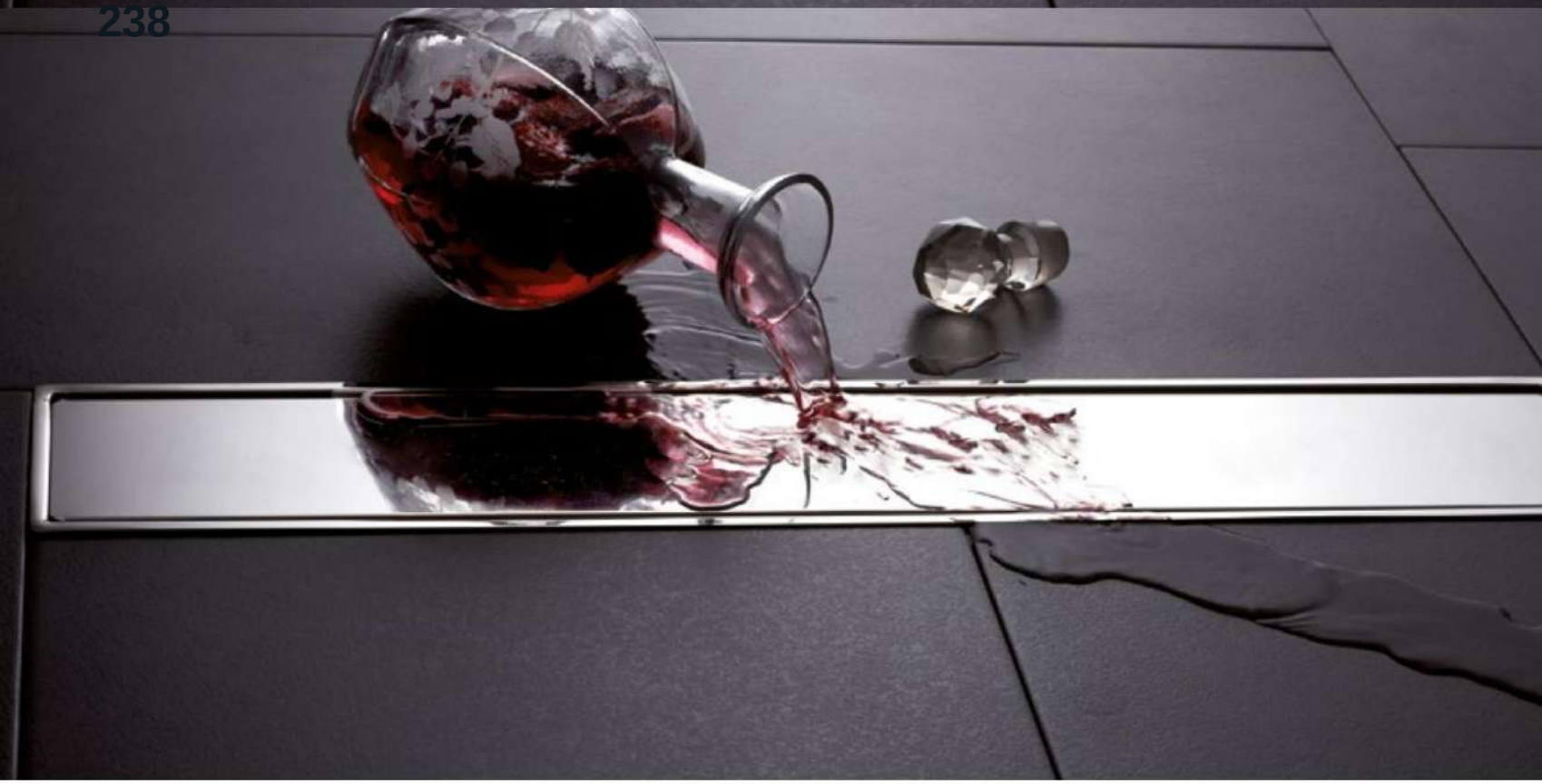

Machine Translated by Google

Lineardrain minimal.

The Lineardrain Minimal series for the dimensions 0.90x0.10m or 0.60x0.10m or 0.30x0.06m, which was designed to create an integrated effect between the drainage system and the floor. The same version is reversible, can be installed from its INOX side or can be tiled.

With TOP VALVE and base, side outlet at ø40 mm and low profile that does not exceed 7cm.
Flow 8L/min or 27L/min (without TOP VALUE silicone valve).
Without the siphon vertical outlet in ø51mm.

The Floordrain In-Tile range for the dimensions 0.20x0.20m or 0.15x0.15m or 0.13x0.13m, which has been designed to create a complete & effective system between the drain system and the floor. The same version is reversible or can take tiles where only the slit remains visible.
With TOP VALVE and a base, having a side outlet at ø40 mm and low profile not exceeding 9cm.
Flow 8L/min or 27L/min (without the silicone valve TOP VALVE).
Without the bent tube vertical outlet at ø51mm.

Dimensions: **0.90x0.10m** 04550
0.60x0.10m 04548
0.30x0.06m 05575

Material: **Stainless steel AISI 304 / AISI 304 Stainless steel.**

Machine Translated by Google

Machine Translated by Google

Tile minimal & Linea minimal.

Tile Minimal grid 0.30x0.10 m with siphon for placing tiles. Outlet ø40mm.

With TOP VALVE and base, side outlet at ø40 mm and low profile that does not exceed 7cm.
Without the siphon vertical outlet in ø51mm.
Flow 8L/min or 25L/min (without silicone valve).

Grid Tile Minimal 0.30x0.10 m with bent tube for taking tiles.
Outlet at ø40mm.
With TOP VALVE and a base, having a side outlet at ø40 mm and low profile not exceeding 7cm.
Without the bent tube, vertical outlet at ø51mm
Flow 8L/min or 25L/min (without the silicone valve).

Dimensions: **0.30x0.10m** 04527

Linea Minimal stainless steel grill 0.30x0.10 m with grates and siphon.
With TOP VALVE and base, side outlet at ø40 mm and low profile that does not exceed 7cm.
Flow 8L/min or 33L/min (without silicone valve).
Outlet ø40.

Linea Minimal 0.30x0.10 m stainless steel grid with grates and bent tube.
With TOP VALVE and a base, having a side outlet at ø40 mm and low profile not exceeding 7cm.
Flow 8L/min or 33L/min (without the silicone valve).
Outlet at ø40mm.

Dimensions: **0.30x0.10m** 04528

Material: **Stainless steel AISI 304 / AISI 304 Stainless steel.**

Machine Translated by Google

Machine Translated by Google

Modular.

The MODULAR series with dimensions from 1.20x0.04m up to 0.20x0.04m, was designed to create an integrated effect between the drain system and the floor. Consists of ABS body and stainless steel, reversible cover for tile installation with Top Valve & membrane set for waterproofing. Outlet vertical to ø50 mm.

The MODULAR range with dimensions from 1.20x0.04m up to 0.20x0.04m, has been designed to create a complete & effective system between the drain system and the floor. It consists of an ABS body and a stainless steel, reversible cover for tile installation with Top Valve & a membrane set for waterproofing.
Vertical outlet at ø50 mm.

Dimensions:	**1.20x0.04m**	05620
	1.10x0.04m	06346
	1.00x0.04m	05760
	0.90x0.04m	06345
	0.80x0.04m	05753
	0.70x0.04m	05759
	0.60x0.04m	05831
	0.50x0.04m	06344
	0.40x0.04m	06343
	0.30x0.04m	06342
	0.20x 0.04m	06341

Material: **ABS**

body, stainless steel AISI 304 cover / ABS body, stainless steel AISI 304 cover.

Machine Translated by Google

244

Machine Translated by Google

Floordrain cover plates.

Floor "Overlay" grates made of stainless steel.
Stainless steel floor “Overlay” grids.

Tile grid / Tile grid
Dimensions: **0.102x0.102m** 05647

Floor rack with Click Clack chrome / Floor rack with Click Clack chrome mechanism

Flow 37L/min / Flow 37L/min.

Dimensions: **0.15x0.15m 0.10x0.10m** 04529 04689

INOX floor grid with screw plate and cover / INOX floor grid with screw plate and cover

Vertical outlet at ø51mm / Vertical outlet at ø51mm.
Dimensions: **0.10x0.10m**
Color: **Chrome Gold Bronze** 04686 04695 04687

Material: **Stainless steel AISI 304 / AISI 304 Stainless steel.**

Machine Translated by Google

Machine Translated by Google

Walldrain.

The Walldrain series for the dimension 0.30x0.06m, was designed to create an integrated effect between the drainage system and the wall.

With TOP VALVE and base, lateral outlet in ø40mm.
Flow 8L/min or 27L/min (without silicone TOP VALVE).
Without the siphon, vertical outlet at ø51mm.

The Walldrain range for the dimensions 0.30x0.06m has been designed to create a complete & effective system between the drain system and the wall.
With TOP VALVE and a base, having a side outlet at ø40mm.
Flow 8L/min or 27L/min (without the silicone valve TOP VALVE).
Without the bent tube vertical outlet at ø51mm.

Dimensions: **0.30x0.06m**
Color: **Chrome Gold Old Effect**

05588
05590
05589

Material: **Stainless steel AISI 304 / AISI 304 Stainless steel.**

Machine Translated by Google

Machine Translated by Google

acrilan

Shower Box

Create a private space of enjoyment by combining your shower with a shower box from the Young series.

249

The YOUNG series is made of composite HPL panels, which are resistant to warping - warping in water and steam.

Create a private space of enjoyment by combining your shower tray with a shower box from the YOUNG series. The YOUNG series is made of HPL panels, which are resistant to warping - distortion in water and steam.

Machine Translated by Google

250

acrilan

Machine Translated by Google

acrilan

Box Young.140

1 . 4 0 x 0 . 7 7 x 2 . 2 7 m

BASIC 06647

Shower cabin with basic functions.
It has: single-lever thermo-mixing battery, with diverter of shower functions. Square ceiling shower 30x30cm, tropical shower, waterfall spout, hand shower on adjustable column, vertical hydromassage jet, seat.

Shower cabin with basic features.
Features: single-lever mixing faucet, with a shower diverter. Square ceiling shower (30x30cm), tropical rain shower head, water fall spout, sliding hand shower holder with height adjustment, vertical hydromassage Jet & a shower seat.

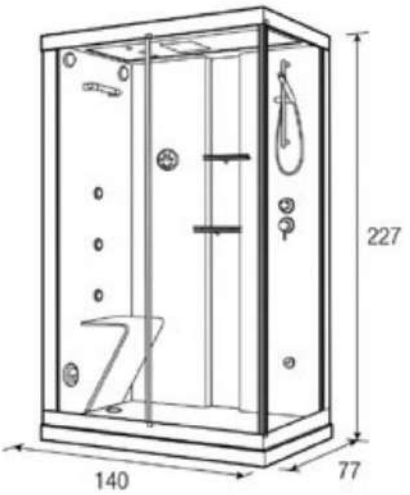

251

PLUS 06460

Shower cabin & Hammam, with multiple functions.
It has: single-lever thermo-mixing battery, with diverter of shower functions. Square ceiling shower 30x30cm with built-in LED color therapy bars, tropical shower, Scottish shower, waterfall spout, hand shower on adjustable column, vertical hydromassage jet, foot shower, seat, Hammam steam generator with cleaning (descaling) system, steam diffuser, LCD control panel, FM radio and connection to other audio sources (CD/MP3).

Shower cabin & Hammam, with multiple features.
Features: single-lever mixing faucet, with a shower diverter.
Square ceiling shower (30x30cm) with an integrated LED color set, tropical rain shower head, Scottish shower system, waterfall spout, sliding hand shower holder with height adjustment, vertical hydromas sage Jet, foot shower & a shower seat, Hammam steam generator with a cleaning system (descaling), steam diffuser, LCD control panel, FM radio and connectivity to other audio sources (CD/MP3).

When ordering, the installation angle (left or right) is necessary information.
When ordering, the installation corner (left or right) is a necessary information.

Colors:

Bianco Lucido

Graphite

Rovere Naturale

Canaletto

Grigio Oriente

Giallo Luserna

Machine Translated by Google

Machine Translated by Google

acrilan

Box Young.120

1.20x0.80/0.75x2 .27m

■

	0.80	0.75
BASIC	06646	06645

Shower cabin with basic functions.
It has: single-lever thermo-mixing battery, with diverter of shower functions. Square ceiling shower 30x30cm, tropical shower, waterfall spout, hand shower on adjustable column, vertical hydromassage jet, seat.

Shower cabin with basic features.
Features: single-lever mixing faucet, with a shower diverter.
Square ceiling shower (30x30cm), tropical rain shower head, water fall spout, sliding hand shower holder with height adjustment, vertical hydromassage Jet & a shower seat.

■

	0.80	0.75
PLUS	06643	06466

Shower cabin & Hammam, with multiple functions.
It has: single-lever thermo-mixing battery, with diverter of shower functions. Square ceiling shower 30x30cm with built-in LED color therapy bars, tropical shower, Scottish shower, waterfall spout, hand shower on adjustable column, vertical hydromassage jet, foot shower, seat, Hammam steam generator with cleaning (descaling) system, steam diffuser, LCD control panel, FM radio and connection to other audio sources (CD/MP3).

Shower cabin & Hammam, with multiple features.
Features: single-lever mixing faucet, with a shower diverter.
Square ceiling shower (30x30cm) with an integrated LED color set, tropical rain shower head, Scottish shower system, waterfall spout, sliding hand shower holder with height adjustment, vertical hydromas sage Jet, foot shower & a shower seat, Hammam steam generator with a cleaning system (descaling), steam diffuser, LCD control panel, FM radio and connectivity to other audio sources (CD/MP3).

When ordering, the installation angle (left or right) is necessary information.
When ordering, the installation corner (left or right) is a necessary information.

Colors:

Bianco Lucido

Graphite

Rovere Naturale

Canaletto

Grigio Oriente

Giallo Luserna

Machine Translated by Google

Machine Translated by Google

acrilan

Box Young.100

1 . 0 0 x 0 . 6 8 x 2 . 2 7 m

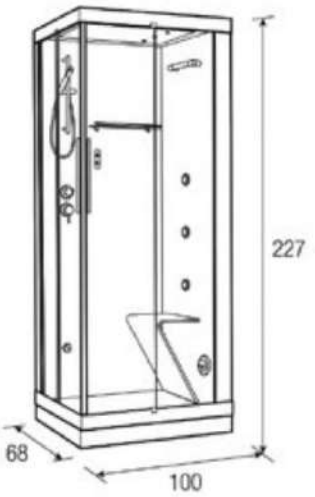

BASIC 06644

Shower cabin with basic functions.
It has: single-lever thermo-mixing battery, with diverter of shower functions. Square ceiling shower 30x30cm, tropical shower, waterfall spout, hand shower on adjustable column, vertical hydromassage jet, seat.

Shower cabin with basic features.
Features: single-lever mixing faucet, with a shower diverter. Square ceiling shower (30x30cm), tropical rain shower head, water fall spout, sliding hand shower holder with height adjustment, vertical hydromassage Jet & a shower seat.

PLUS 03520

Shower cabin & Hammam, with multiple functions.
It has: single-lever thermo-mixing battery, with diverter of shower functions. Square ceiling shower 30x30cm with built-in LED color therapy bars, tropical shower, Scottish shower, waterfall spout, hand shower on adjustable column, vertical hydromassage jet, foot shower, seat, Hammam steam generator with cleaning (descaling) system, steam diffuser, LCD control panel, FM radio and connection to other audio sources (CD/MP3).

Shower cabin & Hammam, with multiple features.
Features: single-lever mixing faucet, with a shower diverter.
Square ceiling shower (30x30cm) with an integrated LED color set, tropical rain shower head, Scottish shower system, waterfall spout, sliding hand shower holder with height adjustment, vertical hydromas sage Jet, foot shower & a shower seat, Hammam steam generator with a cleaning system (descaling), steam diffuser, LCD control panel, FM radio and connectivity to other audio sources (CD/MP3).

When ordering, the installation angle (left or right) is necessary information.
When ordering, the installation corner (left or right) is a necessary information.

Colors:

Bianco Lucido

Graphite

Rovere Naturale

Canaletto

Grigio Oriente

Giallo Luserna

Machine Translated by Google

acrilan

hammam.

256

PRODOTTO IN

ITALIA

Machine Translated by Google

Machine Translated by Google

hammam.

Transform your bathroom into the ultimate place of relaxation, hygiene, skin care and respiratory therapy. Using high-quality, Italian-made components, we create a unique feeling of warmth and care. The steam generators have power from 2.5kW up to 24kW, with indoor or outdoor unit. Enjoy unique moments of relaxation and well-being in an elegant environment with Italian refinement.

Transform your bathroom into the ultimate place of relaxation, hygiene, skin and respiratory care. Using high-quality, Italian-made machinery, we create a unique feeling of warmth and well-being. The steam generators have power starting from 2.5 kW up to 24 kW, with an indoor or outdoor unit. Enjoy unique moments of relaxation and well-being in an elegant space with Italian design.

Choose the appropriate steam generator, depending on the volume of your hammam.
1kW = 1.2m3 in an insulated space for Hammam, otherwise 1kW corresponds to 1m3

Choose the appropriate steam generator depending on the volume of the hammam. 1kW equals 1.2m3 in an insulated hammam space, otherwise 1kW corresponds to 1m3

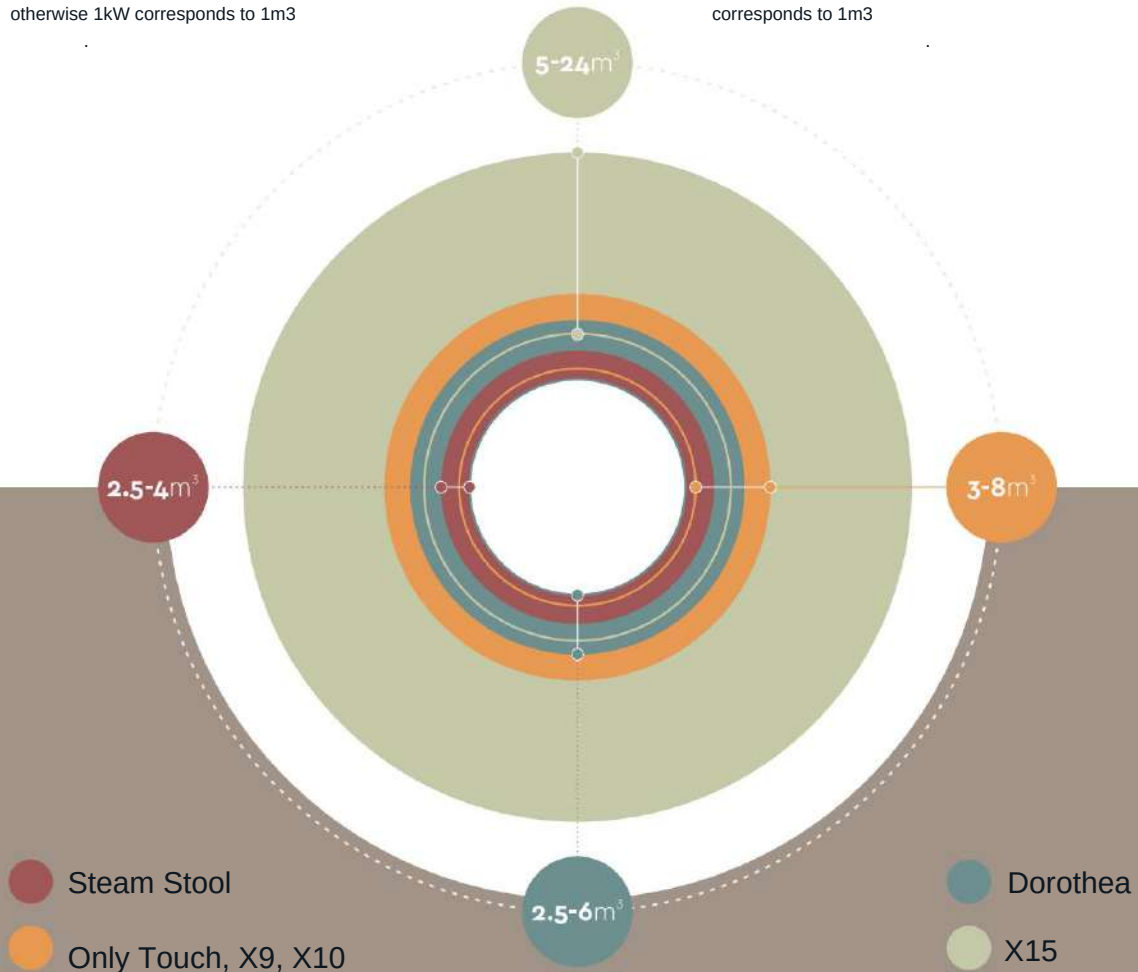

Machine Translated by Google

Steam Stool
2.5kW, 3kW, 4kW

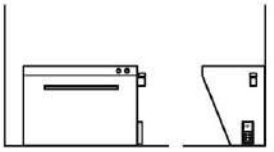

Only Touch
3kW, 4kW, 6kW, 8kW

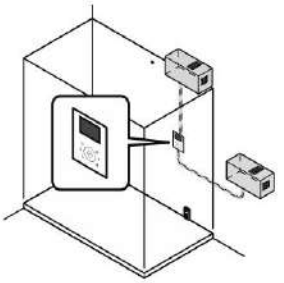

X9, X10
3kW, 4kW, 6kW, 8kW

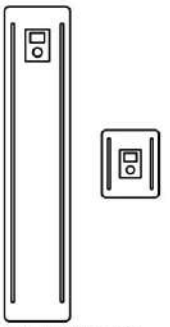

Dorothea
2.5kW, 3kW, 4kW, 6kW

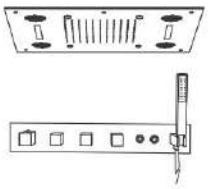

X15
5kW, 6kW, 8kW, 9kW
12kW, 16kW, 20kW, 24kW

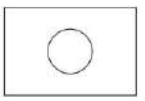

Machine Translated by Google

260

Machine Translated by Google

Steam stool.

Hammam seat with integrated steam generator. It
has a container of essential oils and aromatic substances (aromatherapy), as well as integrated led color therapy. On/off function
with inox buttons and descaling cycle programming.

Hammam seat with an integrated steam generator.
It has a container for essential oils and an aroma pump (for aromatherapy) as well as an integrated LED color therapy.
ON/OFF function with inox buttons and programming of descaling cycle.

261

Available in / Available in: 2.5kW 06539 **3kW**
06472 **4kW**
06473 Suitable
for covering space from 3 to 5 cubic meters (m3).
Suitable for covering a space from 3 to 5 cubic meters (m3).

Color: White matte

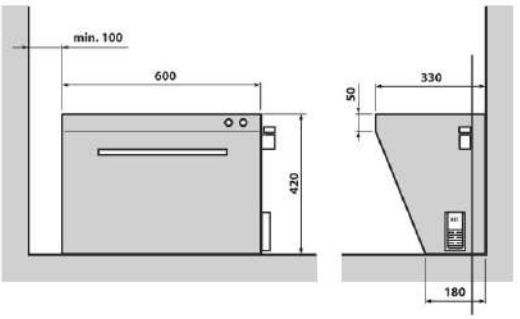

Machine Translated by Google

Machine Translated by Google

Only touch.

Steam generator kit, with (minimal) Touch control panel and external steam production unit.
With the possibility of diffusing essential oils and aromatic substances (aromatherapy), programmed activation and deactivation functions, operating time and temperature management. Bluetooth connectivity for external audio sources and wired AUX connection.

Programming descaling cycles.

Steam generator kit, with elegant Touch screen control panel and external steam generator.
With the possibility of diffusing essential oils and aromatic substances (for aromatherapy), while it is possible to schedule the start & stop of the steam generator, achieving better management of temperature and operating time.
Bluetooth connectivity to external audio sources and wired AUX connection.
Programming of descaling cycles.

Available in / Available in: 3kW 06355
4kW 06356
6kW 06009
8kW 06182

Suitable for covering space from 4 to 10 cubic meters (m3).
Suitable for covering a space from 4 to 10 cubic meters (m3).

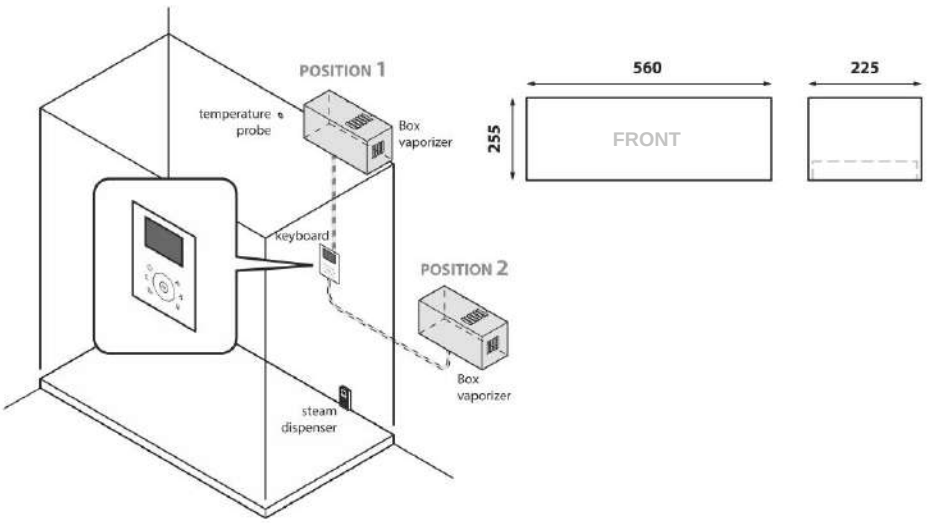

Machine Translated by Google

Machine Translated by Google

X9 touch & X10 touch maxi.

X10

Modern steam generator kits, with Touch & Touch Maxi control panels.
Color therapy with Led, integrated in the control panel and external steam production unit.
With the possibility of diffusing essential oils and aromatic substances (aromatherapy), programmed activation and deactivation functions, operating time and temperature management. Bluetooth connectivity for external audio sources and wired AUX connection.

Programming descaling cycles.

265

Modern steam generator kits, with Touch & Touch Maxi screen control panels.
LED color therapy, integrated in the control panel and external steam production unit.
With the possibility of diffusing essential oils and aromatic substances (for aromatherapy), while it is possible to schedule the start & stop of the steam generator, achieving better management of temperature and operating time.
Bluetooth connectivity to external audio sources and wired AUX connection.
Programming of descaling cycles.

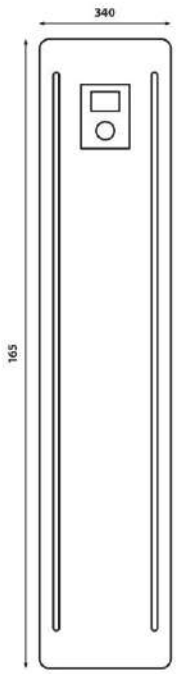

	X9	X10
Available in / Available in: 3kW	05322 06536	
4kW	05240 04969	
6kW	05099 06537	
8kW	05098 06538	

Suitable for covering space from 4 to 10 cubic meters (m3).
Suitable for covering a space from 4 to 10 cubic meters (m3).

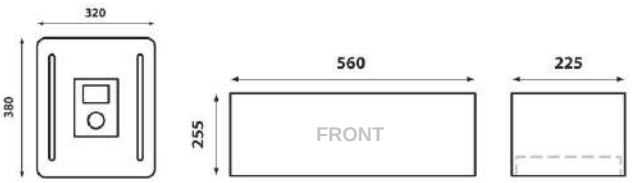

Machine Translated by Google

Machine Translated by Google

program
Dorothea.

The Dorotea Program is a complete kit, perfectly combining shower & Hammam functions. It consists
of: • Thermostatic
battery on a stainless steel plate, dimensions 62x10cm, hand shower and on/ off button for the operation of the Hammam (external steam production unit).
• Ceiling shower 48x63cm, made of stainless steel, with cloud jet and integrated color therapy. Ability to diffuse essential oils and aromatic substances (aromatherapy). • Bluetooth
connection for external audio sources, as well as wired AUX connection.

The Dorotea Program is a complete kit, perfectly combining Shower & Hammam functions.
It consists of:

- A Thermostatic faucet on a stainless steel plate, of dimensions 62x10cm, a hand shower and on/off button for the operation of the Hammam (external steam generator).
- Ceiling shower of dimensions 48x63cm, made of stainless steel, with cloud jet shower head and integrated color therapy.
- Possibility of diffusing essential oils and aromatic substances (for aromatherapy).
- Bluetooth connectivity to external audio sources as well as wired AUX connection.

Available in / Available in: 2.5kW 06528
3kW 05610
4kW 05582
6kW 06527

Suitable for covering space from 3 to 7.5 cubic meters (m3).
Suitable for covering a space from 3 to 7.5 cubic meters (m3).

Proposal for placing the steam generator

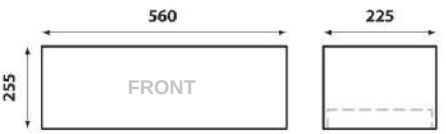

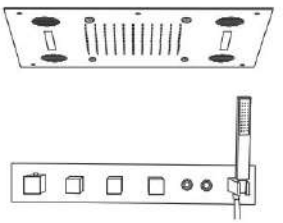

Machine Translated by Google

Machine Translated by Google

X15 touch.
professional

Professional steam generator kit, with an external steam production unit, made of stainless steel, for high durability in continuous and long-term use (24 hours a day). It has an electric drain valve and a steam diffuser with the possibility of diffusing essential oils and aromatic substances (aromatherapy). Professional control screen (Touch) for external placement, with programmed activation and deactivation functions, operating time and temperature management. Programming descaling cycles.

269

Professional steam generator kit, with an external steam production unit, made of stainless steel, for high durability in continuous and long-term use (24 hours a day).
It has an electric drain valve and a steam diffuser with the possibility of diffusing essential oils and aromatic substances (for aromatherapy).
Professional touch screen control panel for outdoor use with possibility of programming on / off function for better time and temperature management.
Programming of descaling cycles.

Available in / Available in: 5kW 06529 **8kW**
06531 **12kW**
06532 **20kW**
06534
6kW 06530
9kW 06448
16kW 06533
24kW 06535

Suitable for covering space from 6 to 29 cubic meters (m3).
Suitable for covering a space from 6 to 29 cubic meters (m3).

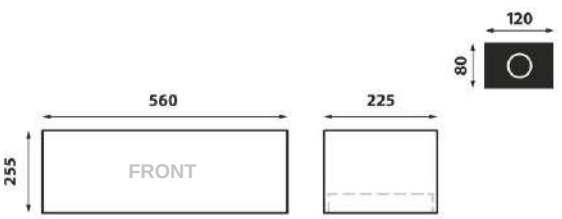

Machine Translated by Google

acrilyc
seat.
Acrylic seat

270

Acrylic finish seat in / Acrylic finish seat in:

White / White gloss	06540
Velvet matte	06543

Dimensions: 1.14 x 0.20 x 0.45 cm

Acrylic finish seat in / Acrylic finish seat in:

White / White gloss	06541
Velvet matte	06542

Dimensions: 0.73 x 0.20 x 0.45

Machine Translated by Google

06479

citrocal steam generator cleaner .

Steam generator cleaner

It is a highly concentrated product based on citric acid, specially designed for the maintenance of the hammam steam generator.
Citric acid guarantees quick and effective desalination of the system, respecting the integrity of the elements that compose it thanks to the top quality corrosion inhibitors present in the composition.

It eliminates the salts from the generator resistors, which in the long run could endanger its good operation.

It is a highly concentrated product based on citric acid, especially designed for the maintenance of the hammam steam generator.
The citric acid guarantees quick and effective descaling of the hammam system, while protecting the integrity of its mechanical components thanks to the top quality anti-corrosives that it contains.
The citric acid eliminates the salts from the generator resistors, which in the long term could endanger its smooth function.

271

Machine Translated by Google

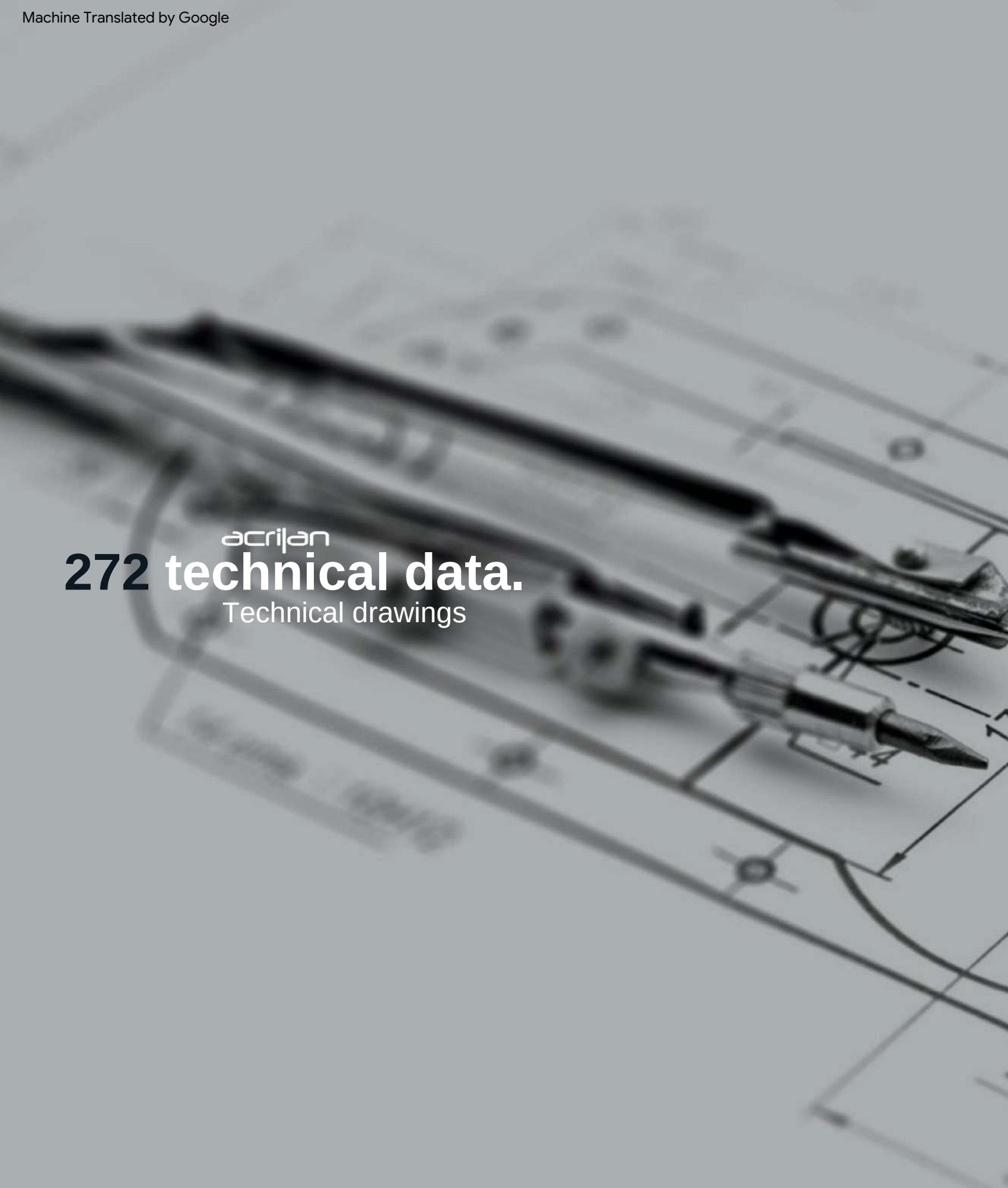

acrilan

272 technical data.

Technical drawings

Machine Translated by Google

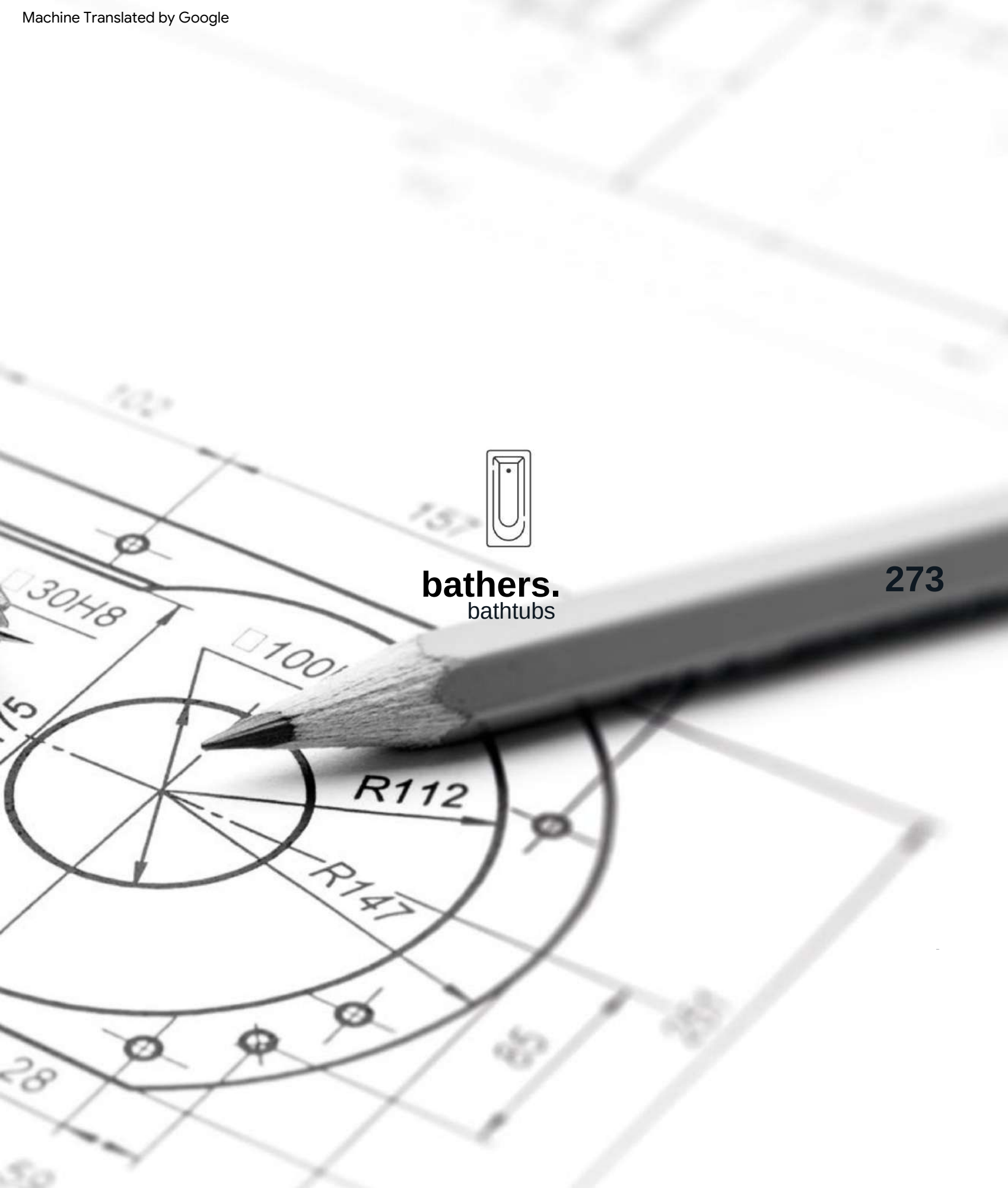

bathers.
bathtubs

Machine Translated by Google

Queen.215x160

12

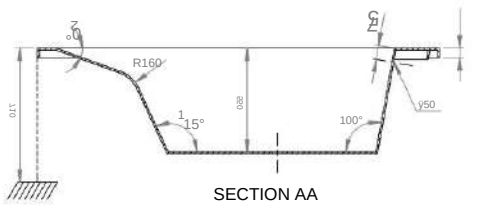

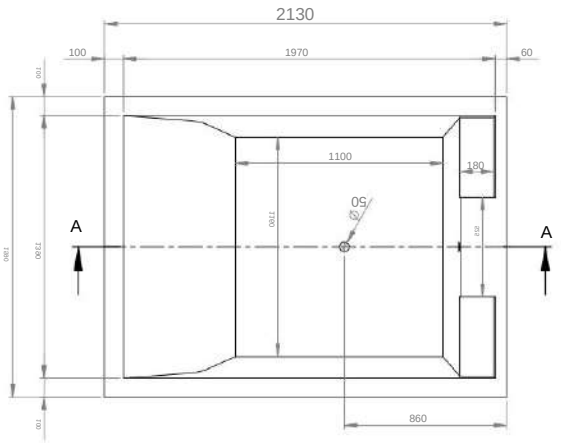

Princess.165x165

16

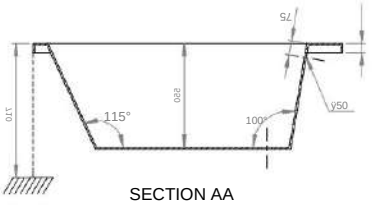

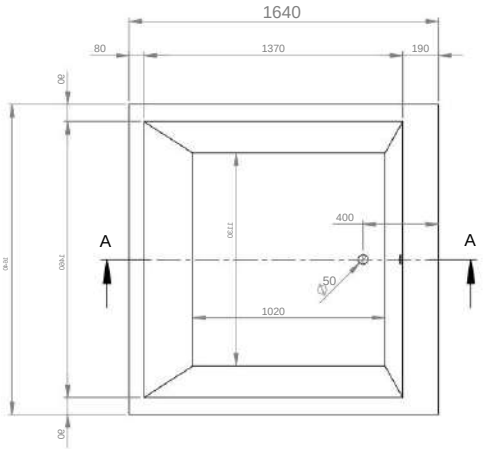

Tango.190x160

20

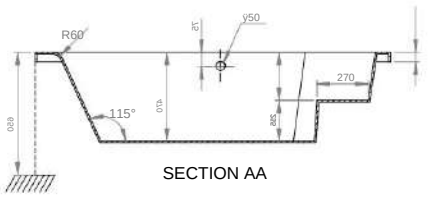

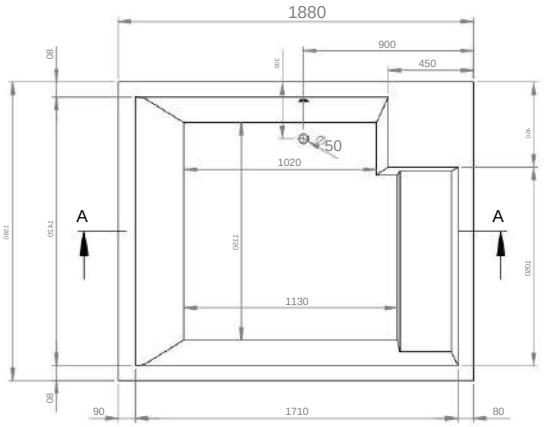

Tango.185x120

20

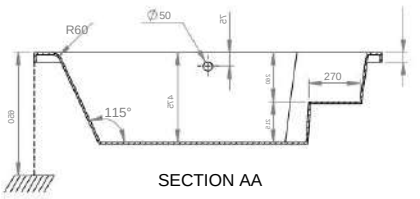

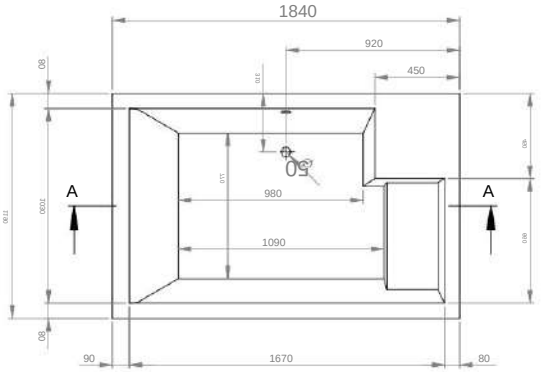

Machine Translated by Google

Lona. 200x140

28

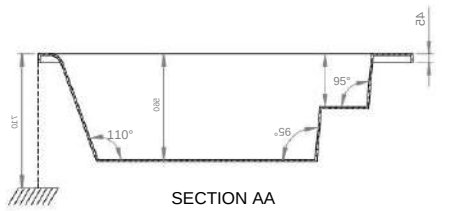

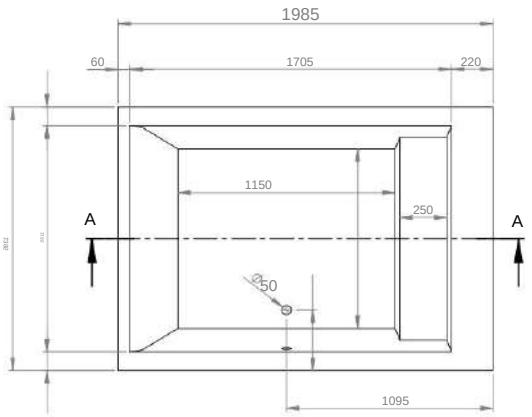

Lona. 200x120

28

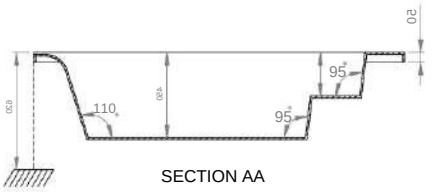

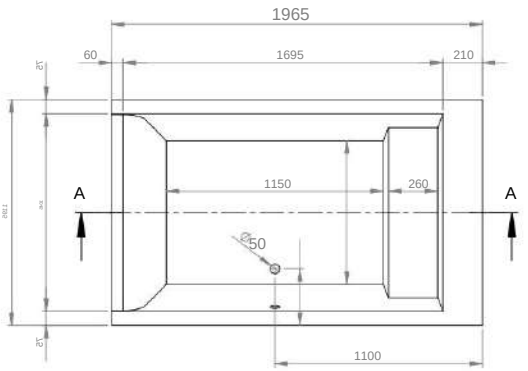

Olympia.200x140

24

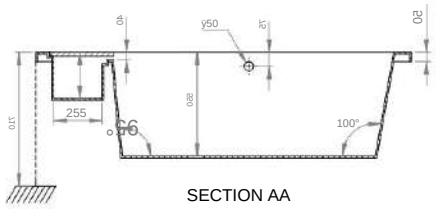

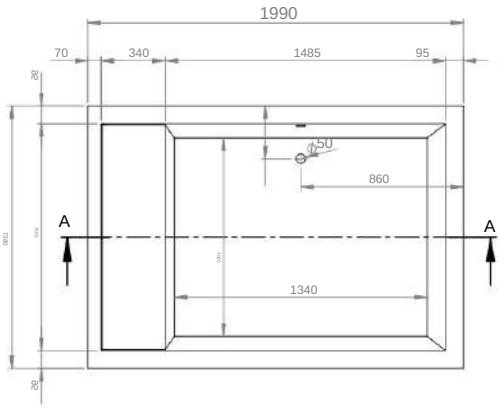

Ithaki. 175x80

50

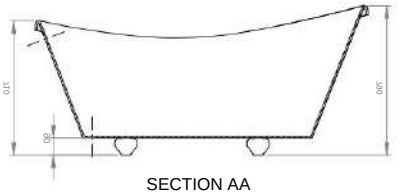

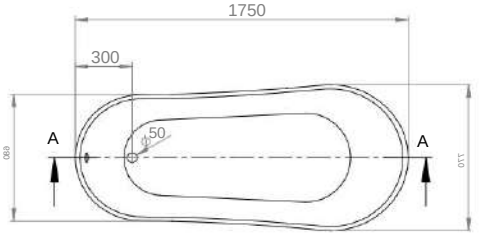

ACRILAN

Machine Translated by Google

Evelyn.170x80

48

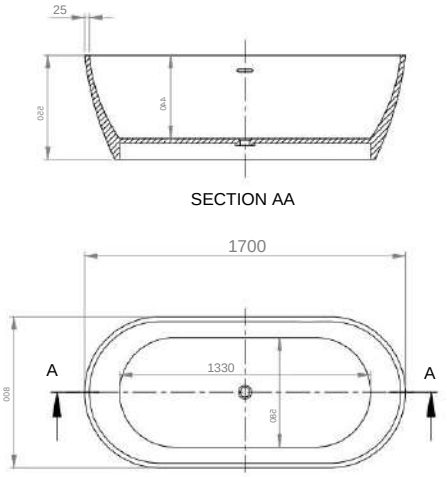

Evelyn.165x80

44

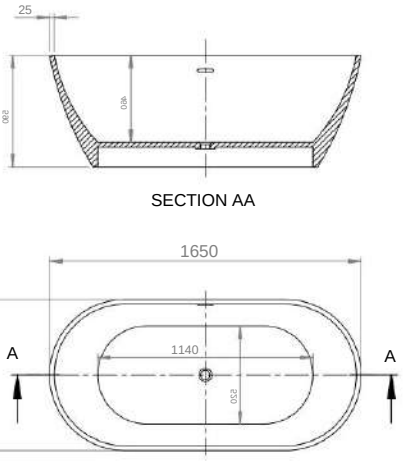

Coral.150x150

56

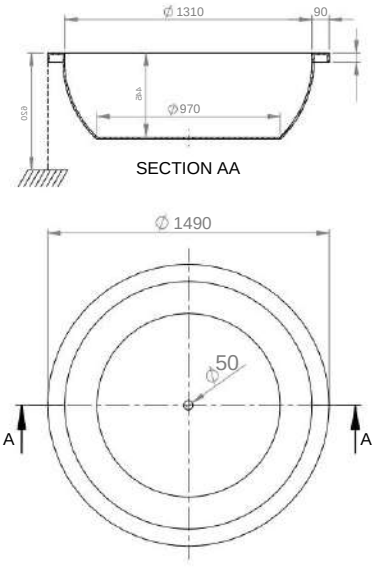

Miami.180x180

58

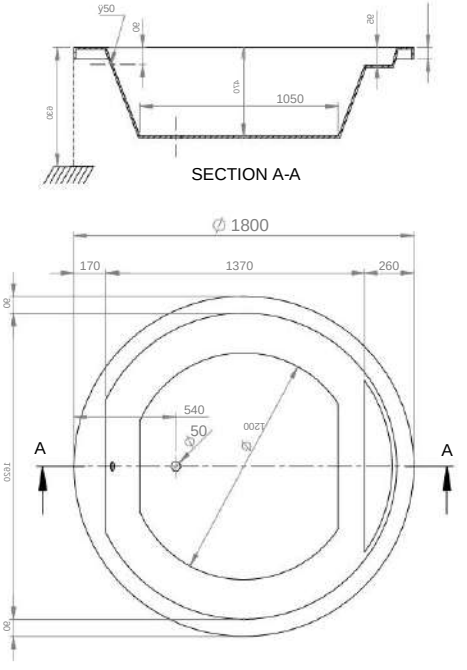

Machine Translated by Google

Oval.180x100

64

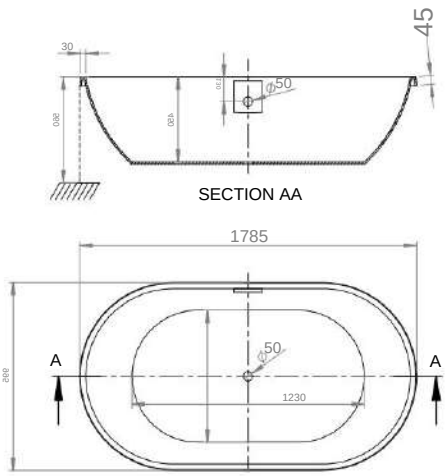

Oval.190x80

66

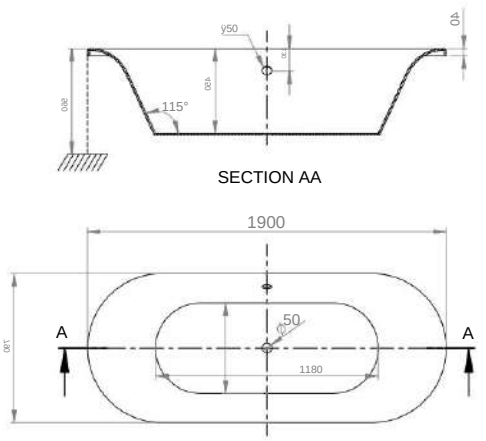

Style.170x80

68

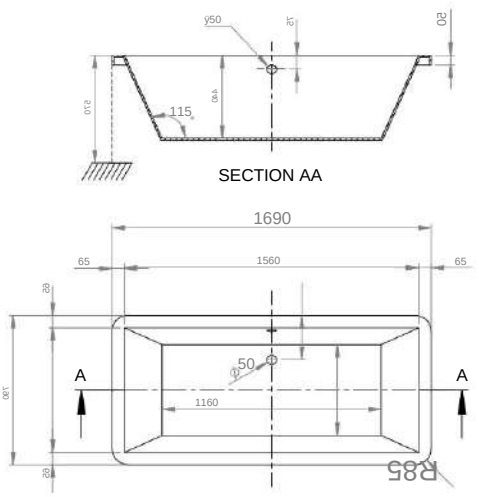

Eliza. 170x70

72

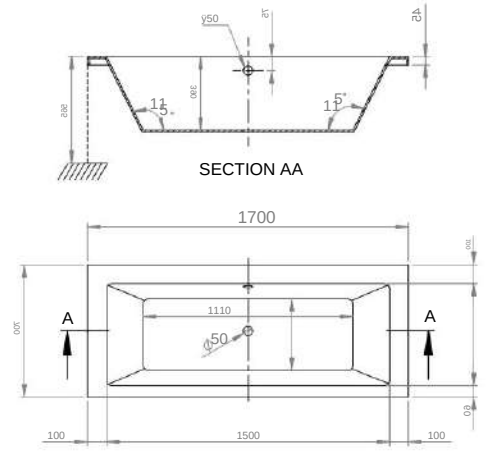

Machine Translated by Google

Eliza. 160x65

72

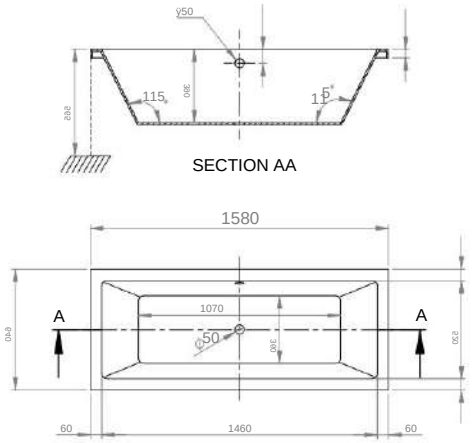

Evita.190x90

78

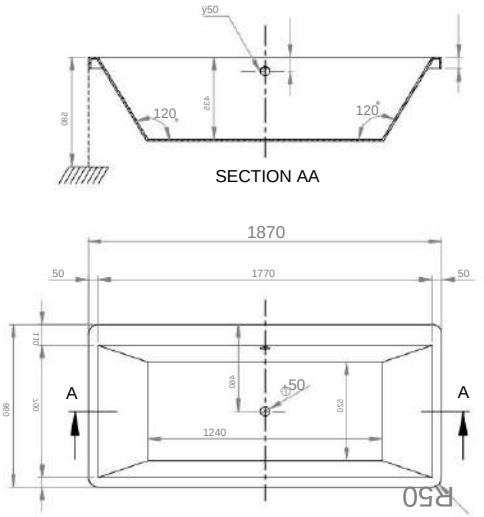

278

Duoline.180x120

80

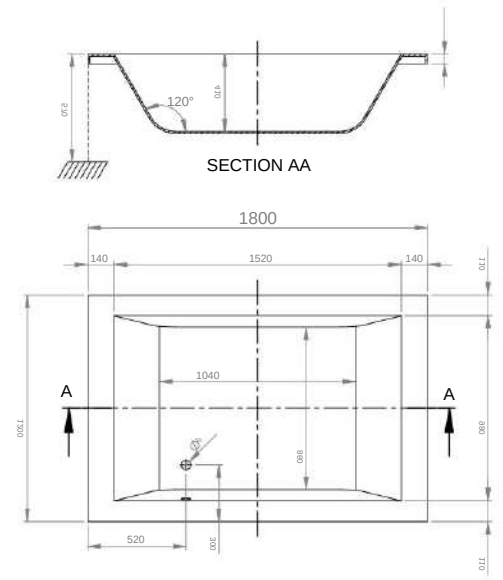

Duoline.180x100

80

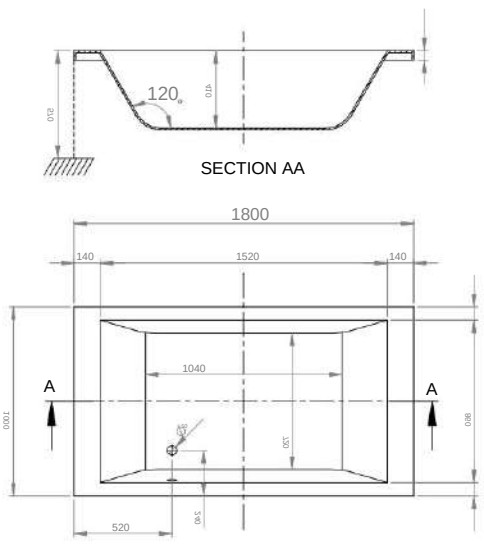

Machine Translated by Google

Mocca Line.170x80

84

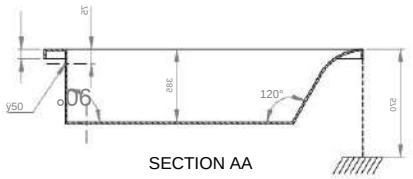

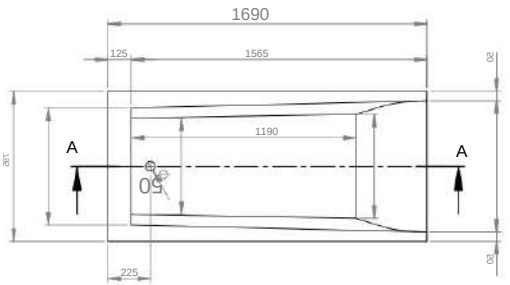

Mocca Line.160x80

84

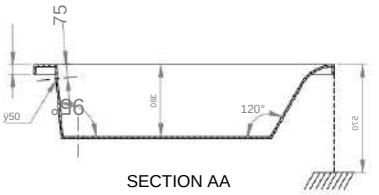

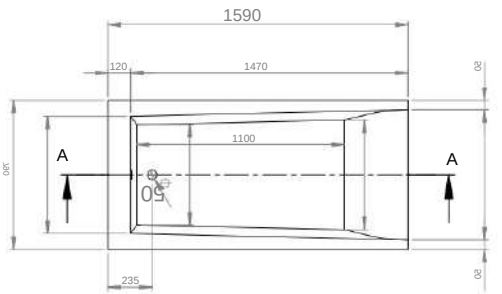

Mocca Line.150x80

84

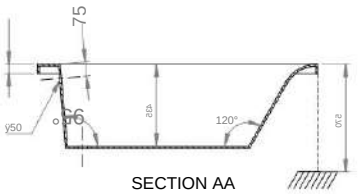

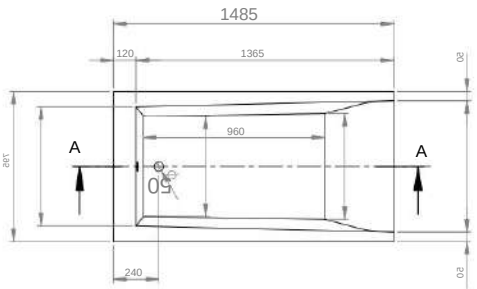

Mocca Line.140x80

84

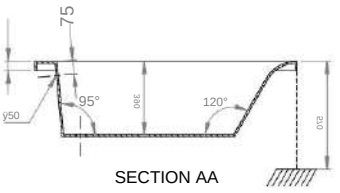

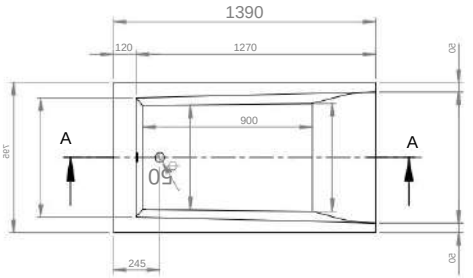

Machine Translated by Google

Zira.180x80

92

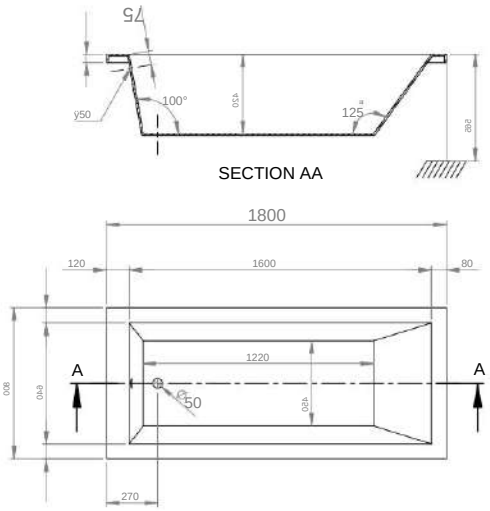

Zira.170x80

92

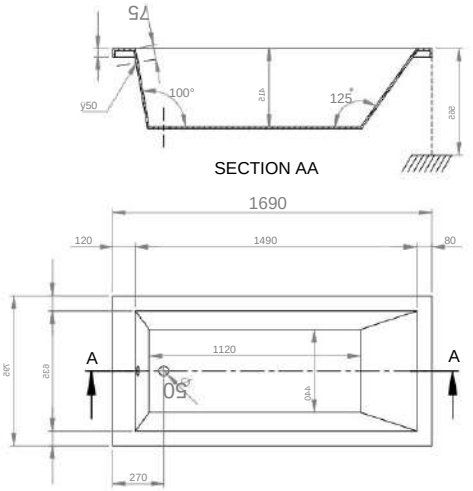

280

Zira.170x75

92

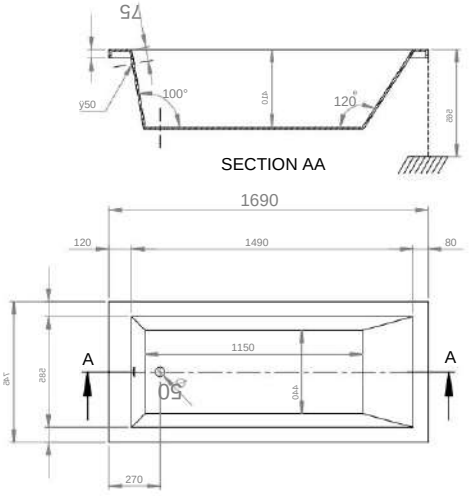

Zira.170x70

92

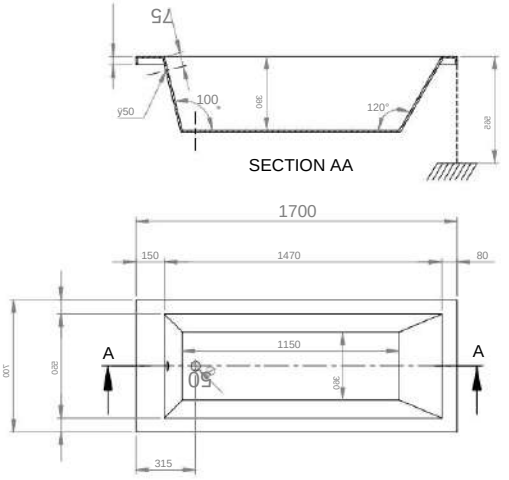

Machine Translated by Google

Zira.160x75

92

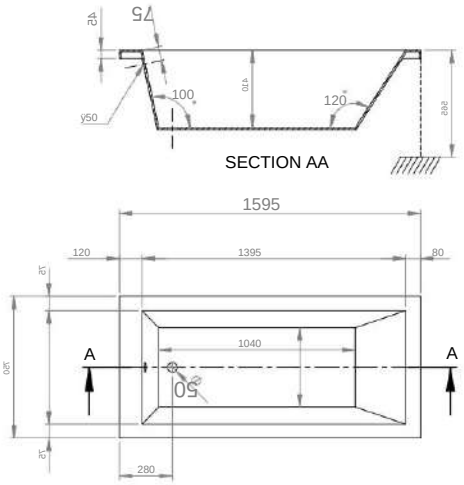

Zira.160x70

92

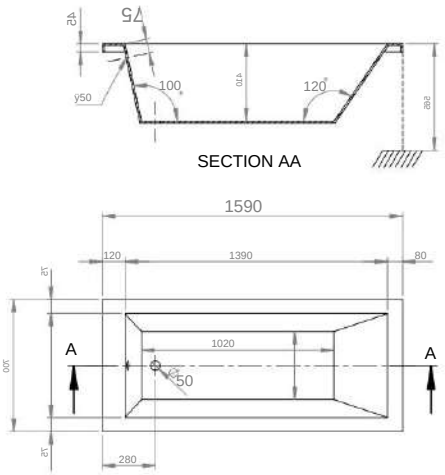

Zira.150x70

92

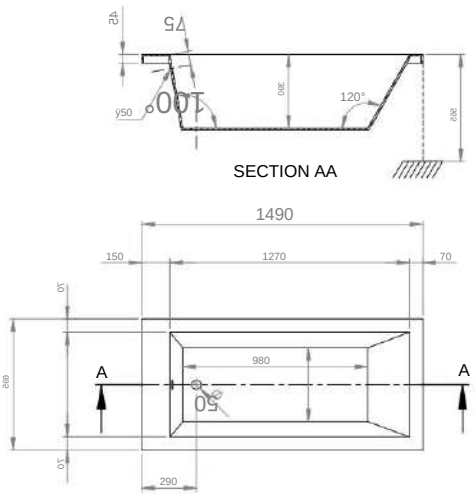

Zira.140x70

92

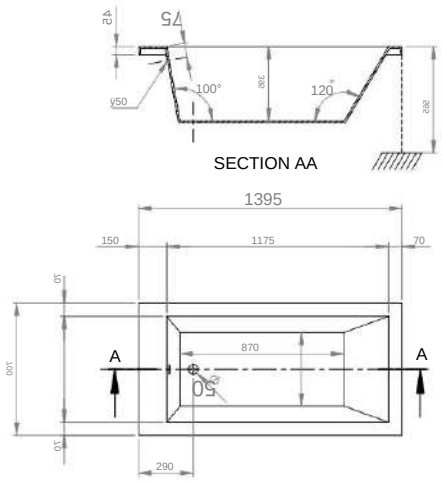

Machine Translated by Google

Zira.130x70

92

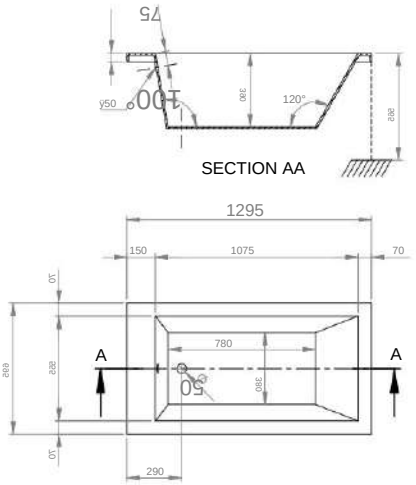

Sine.180x80

96

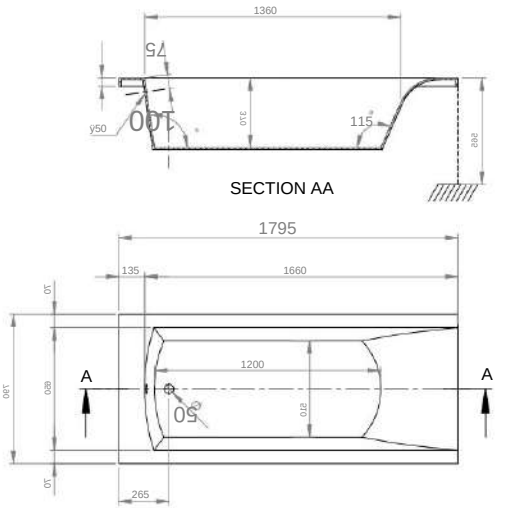

282

Sine.170x80

96

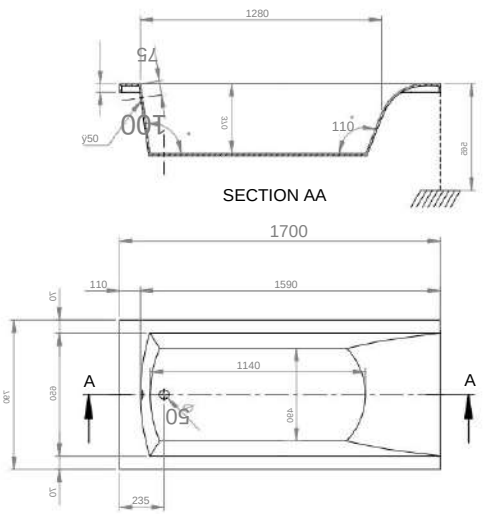

Sine.170x70

96

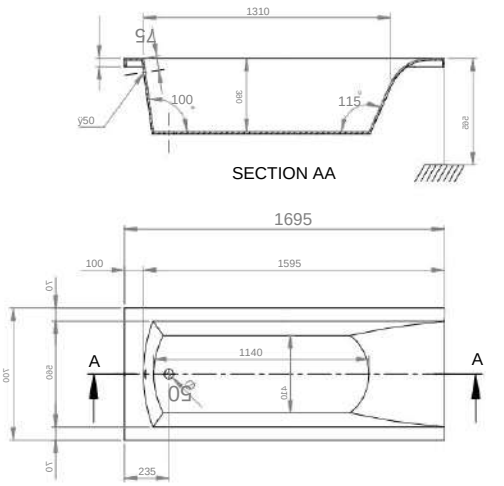

Machine Translated by Google

Sine.160x70

96

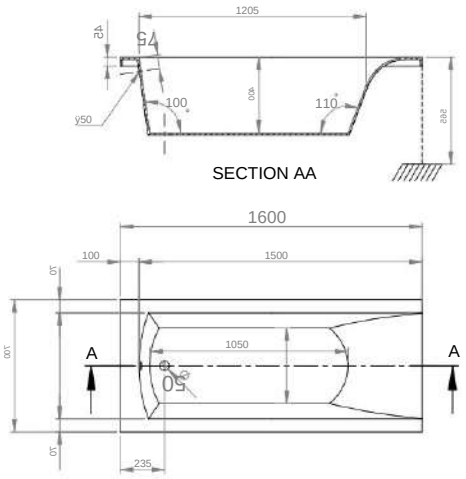

Sine.150x70

96

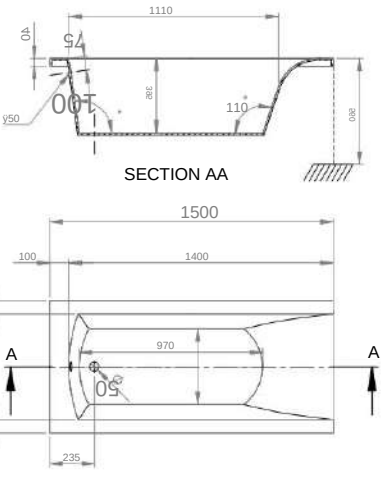

Sunshine.180x80

100

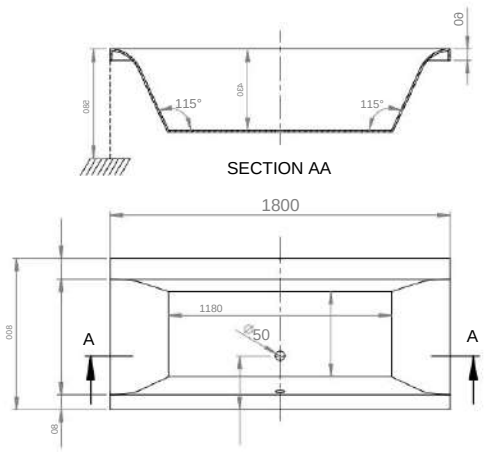

Sunshine.170x80

100

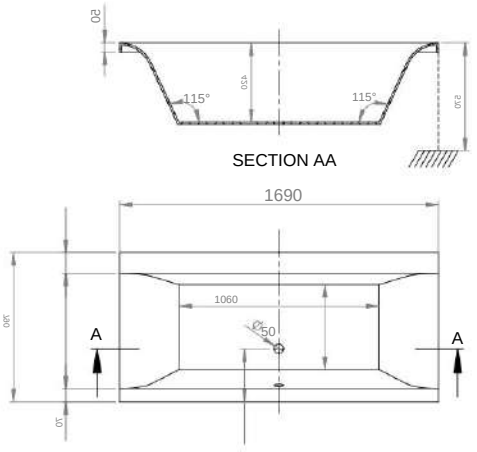

ACRILAN

Machine Translated by Google

Zeta.180x80

104

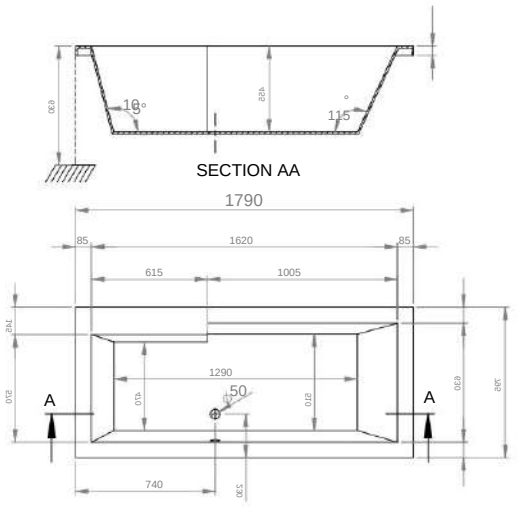

Althea.170x90

110

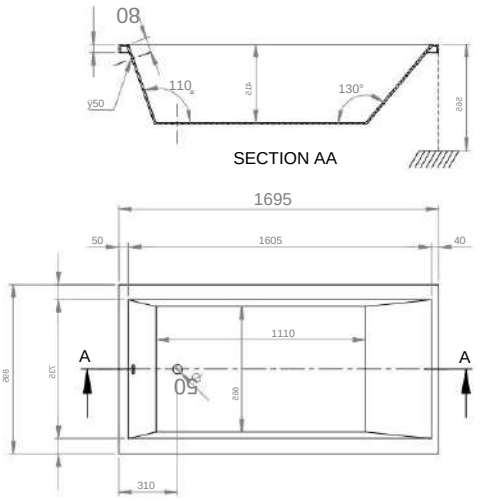

Althea.175x75

110

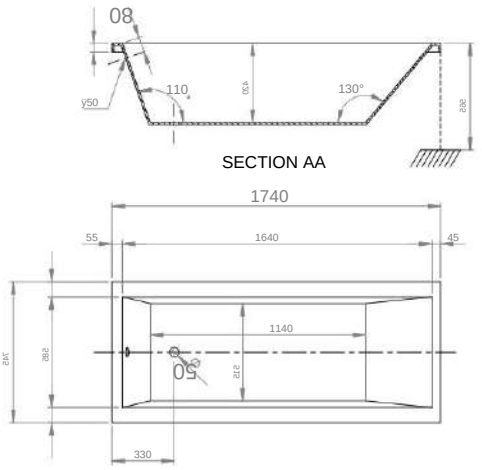

Althea.160x70

110

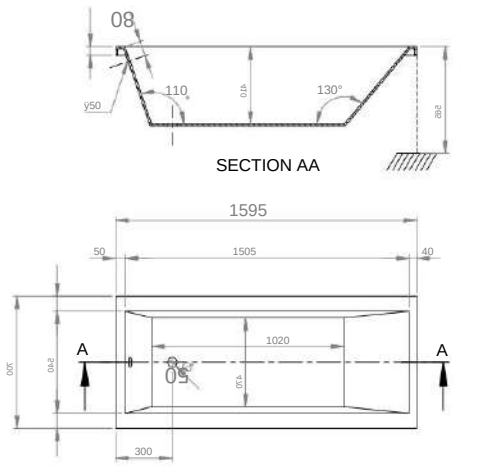

Machine Translated by Google

Kyveli.170x80

112

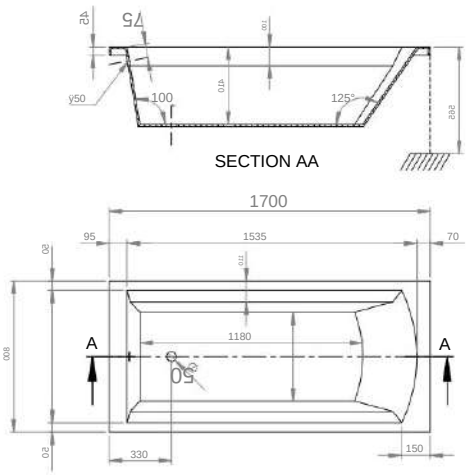

Kyveli.170x75

112

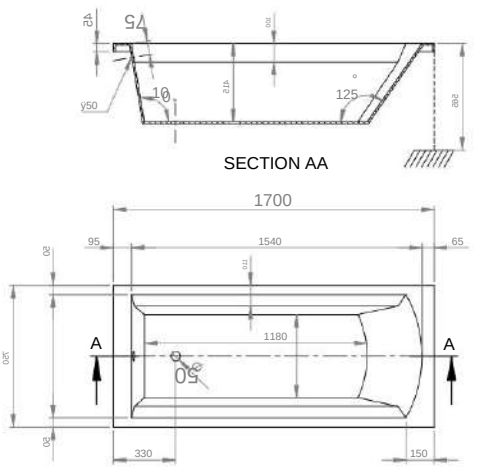

Celine.180x85

88

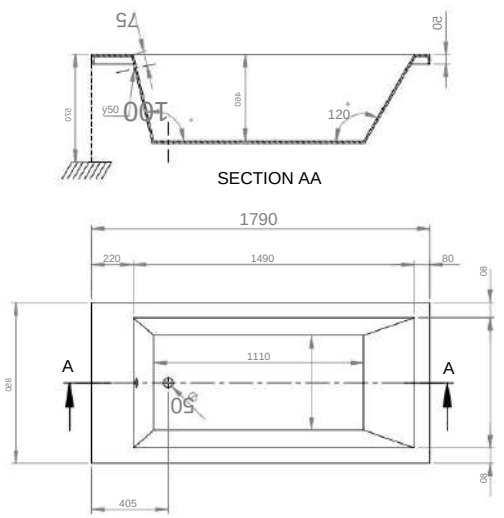

Dilos.190x80/90

122

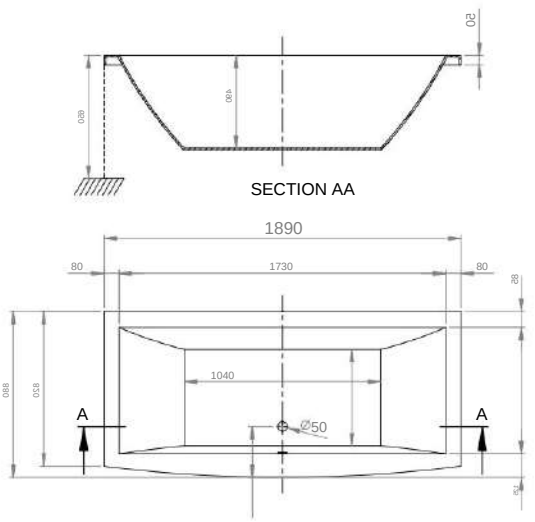

Machine Translated by Google

Thassos. 170x75

114

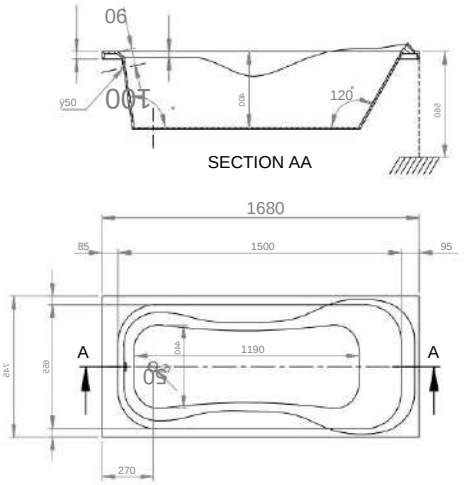

Thassos. 155x75

114

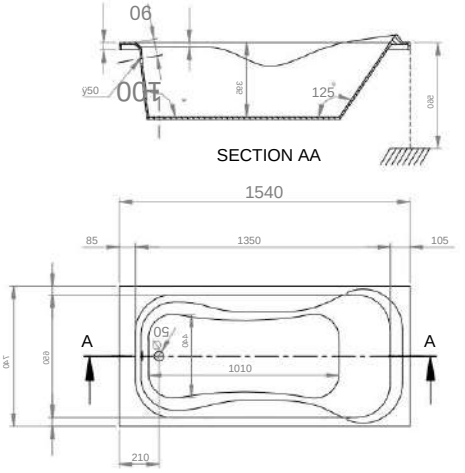

Skiathos.175x80

116

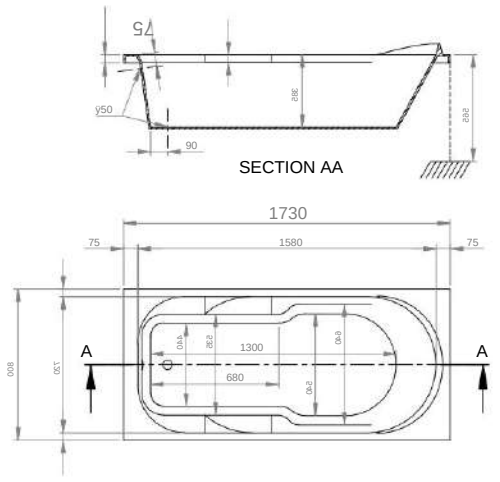

Skiathos.165x70

116

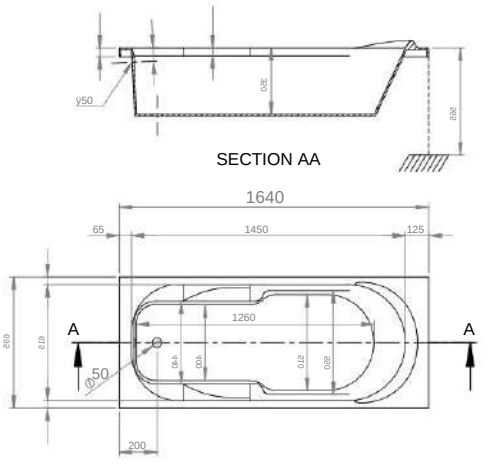

Machine Translated by Google

iOS.180x80

118

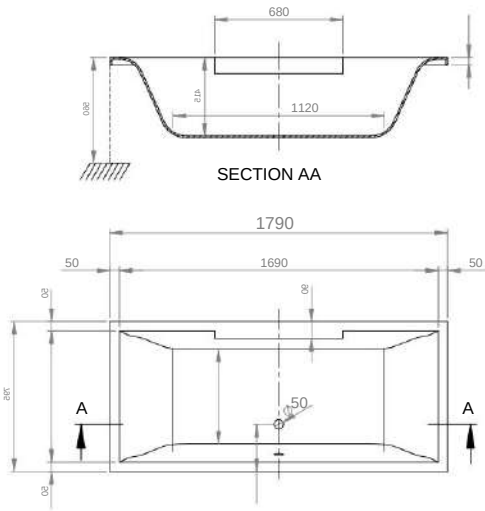

iOS.170x70

118

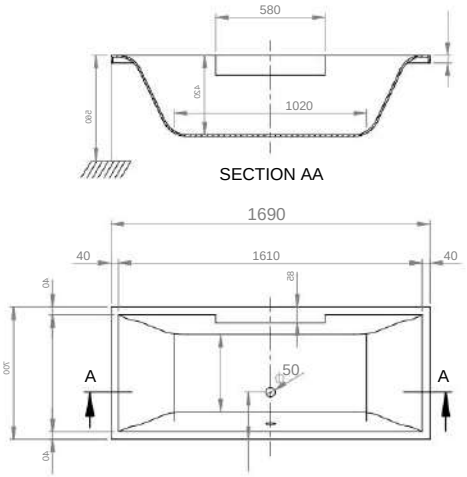

Makedonia.180x90

128

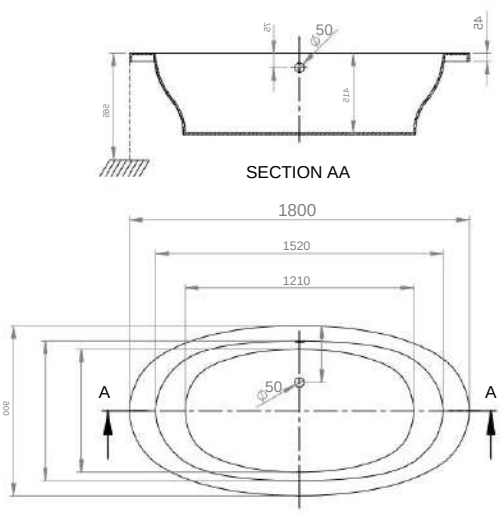

Makedonia.170x80

128

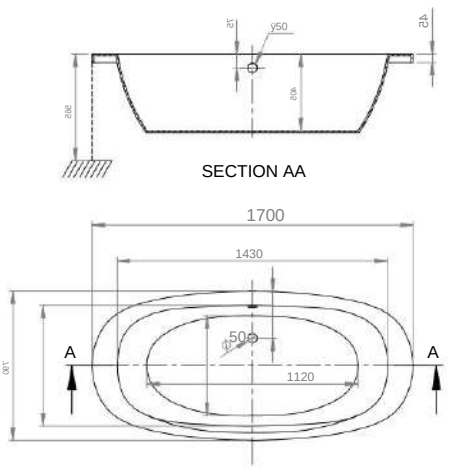

Machine Translated by Google

Kymi.105x70

132

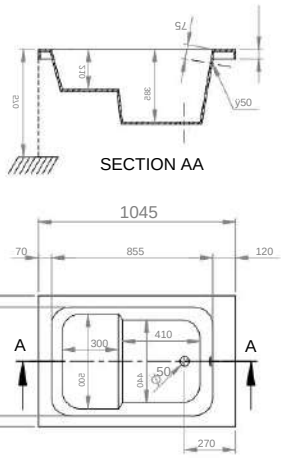

Serifos.160x160

138

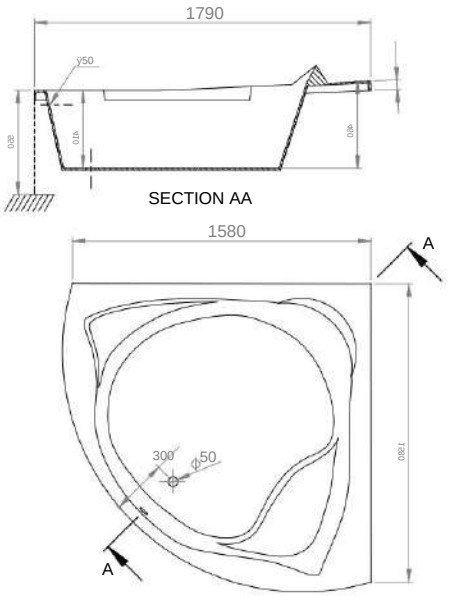

Diva.150x150

140

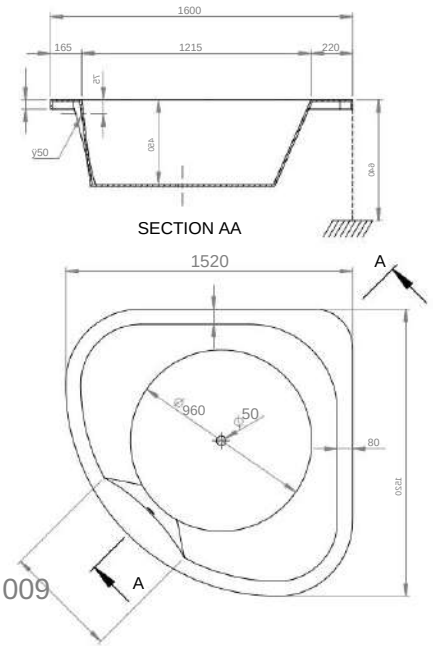

Isabel.145x145

142

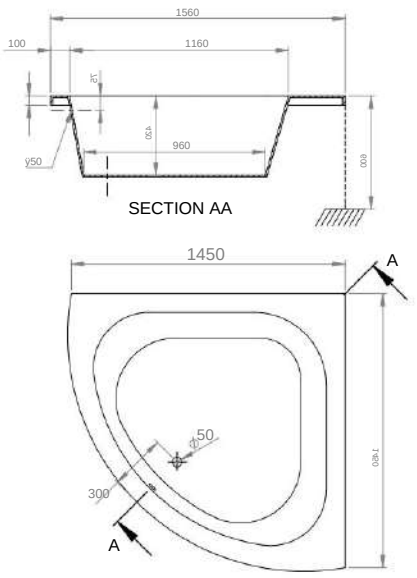

Machine Translated by Google

Poseidon.140x140

146

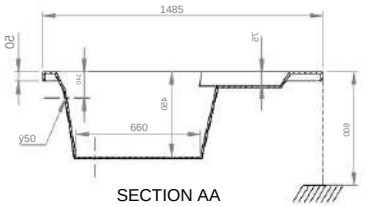

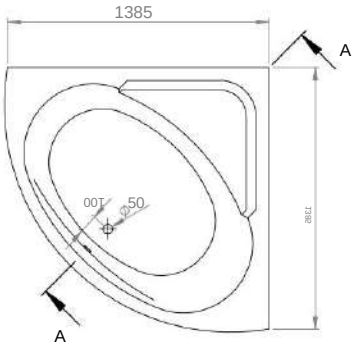

Santorini.127x127

150

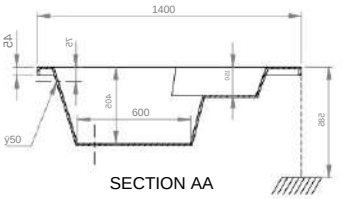

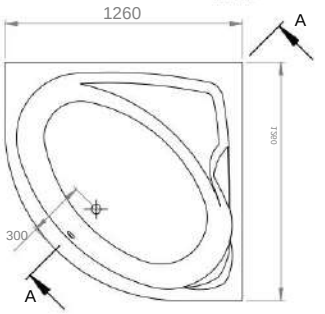

Ikaria.140x140

148

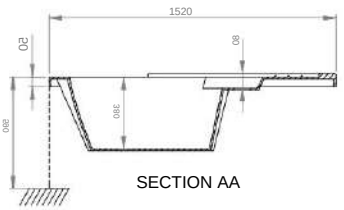

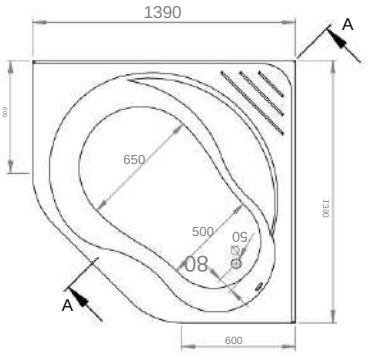

Ikaria.120x120

148

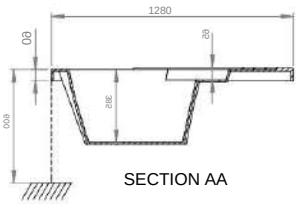

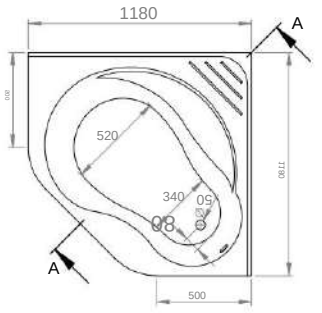

ACRILAN

Machine Translated by Google

Mykonos. 145x145

152

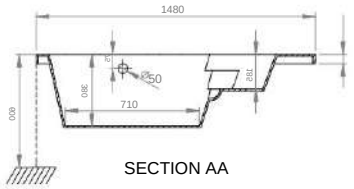

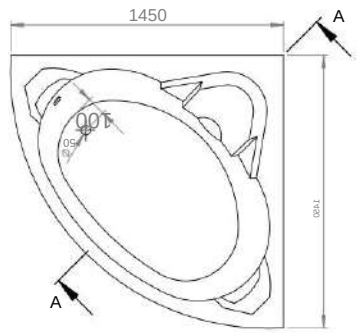

Mykonos. 125x125

154

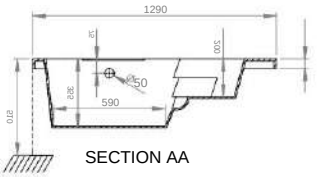

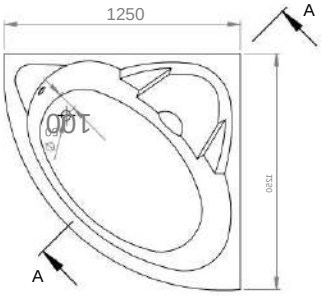

Mykonos. 105x105

156

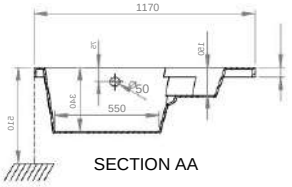

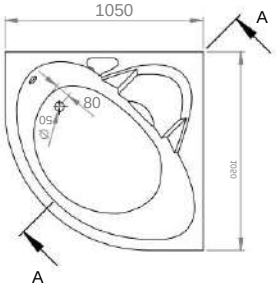

Mykonos. 90x90

158

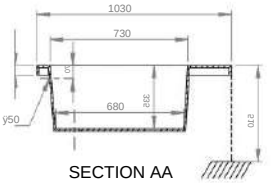

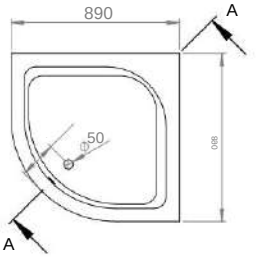

Machine Translated by Google

Kochili.170x70 [1]

162

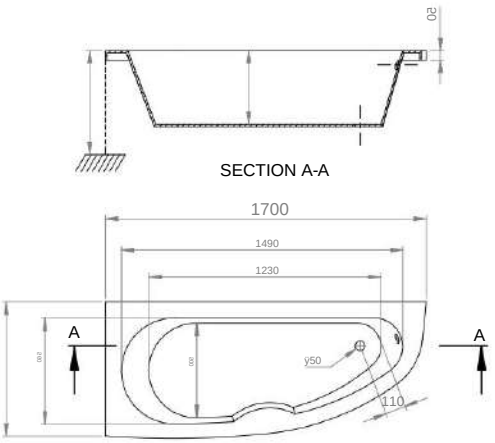

Kochili.170x70 [2]

162

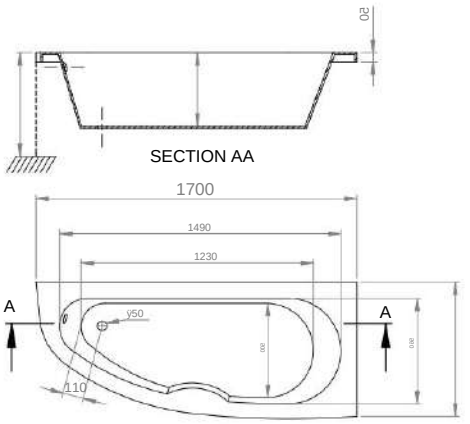

Kochili.160x90 [1]

164

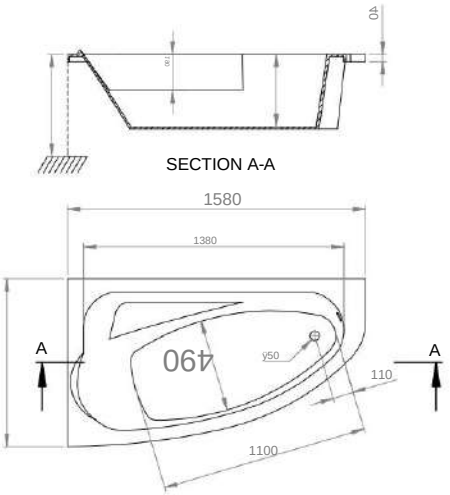

Kochili.160x90 [2]

164

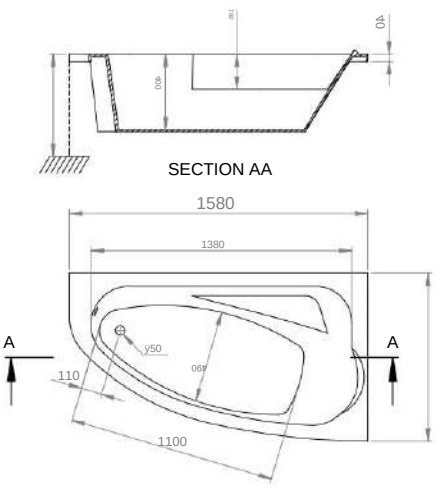

Machine Translated by Google

Kochili.153x100 [1]

166

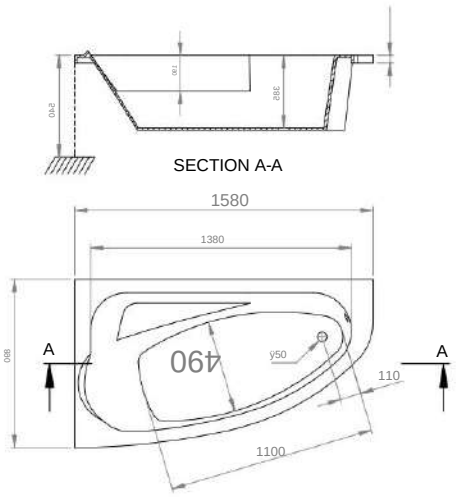

Kochili.153x100 [2]

166

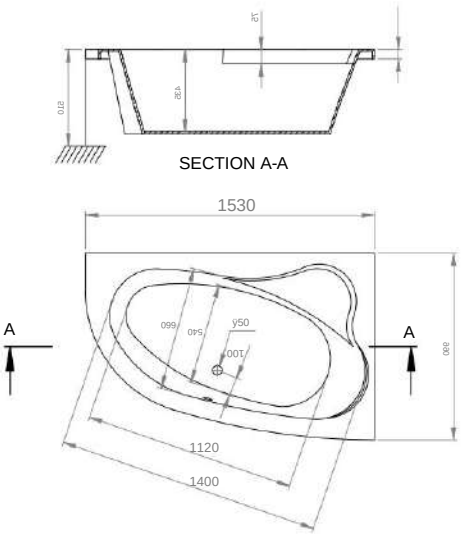

Kochili.145x90 [1]

168

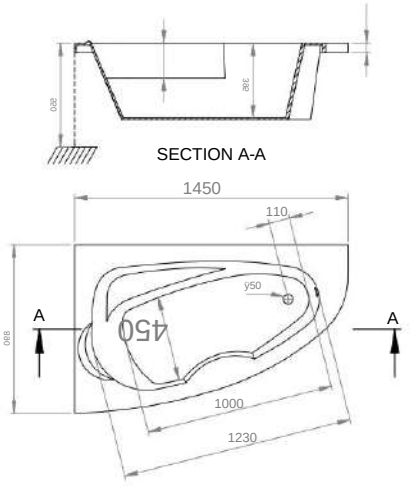

Kochili.145x90 [2]

168

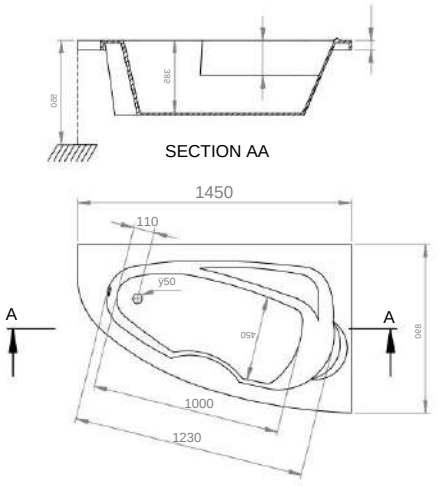

Machine Translated by Google

Kochili.135x80 [1]

170

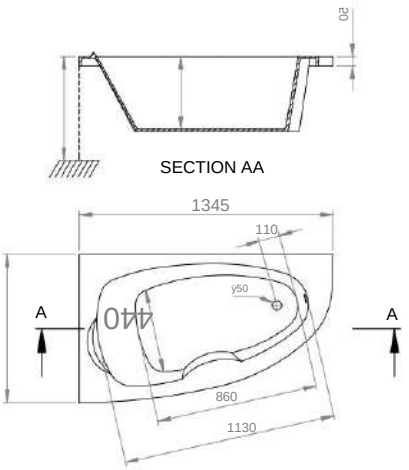

Kochili.135x80 [2]

170

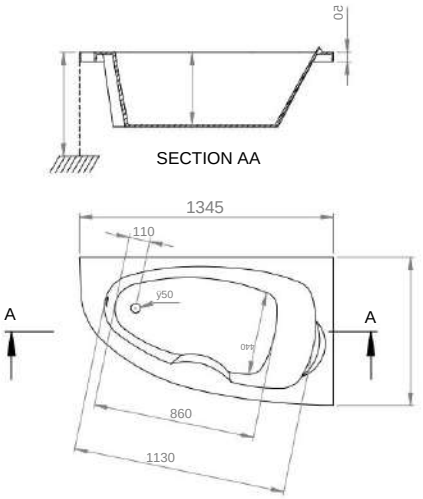

Kochili.125x90 [1]

172

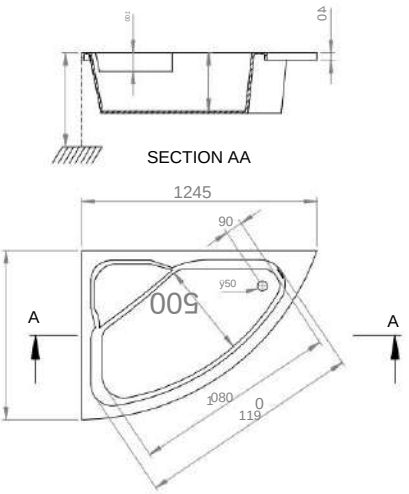

Kochili.125x90 [2]

172

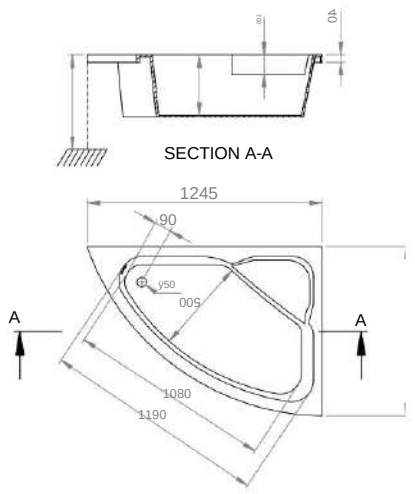

Machine Translated by Google

Minimal. 180x80

178

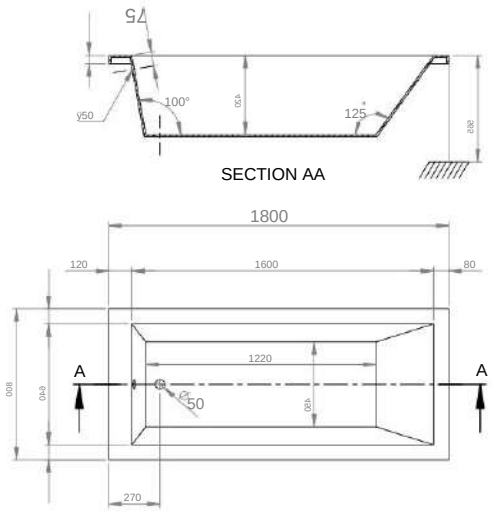

Minimal. 170x80

178

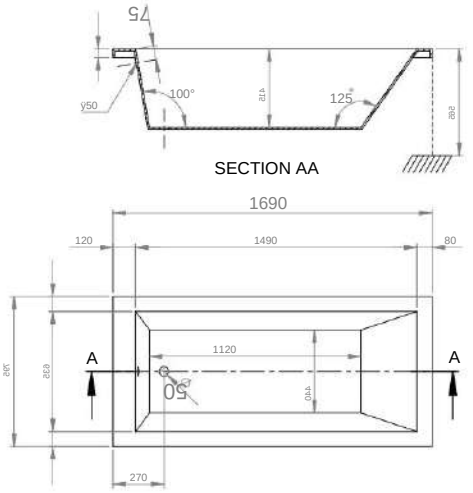

Minimal. 170x75

178

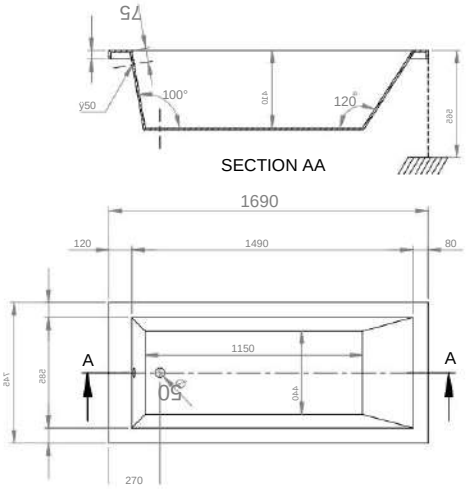

Minimal. 170x70

178

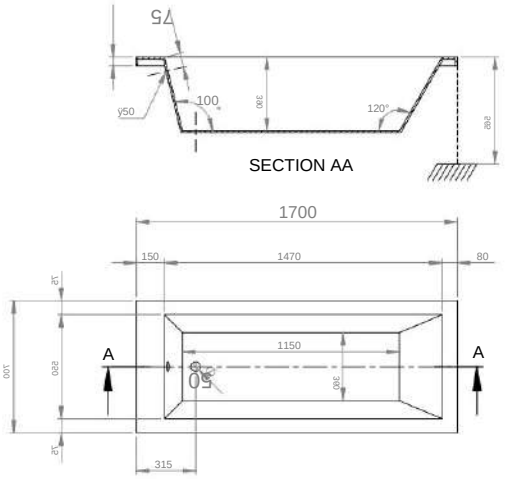

Machine Translated by Google

Minimal. 160x75

178

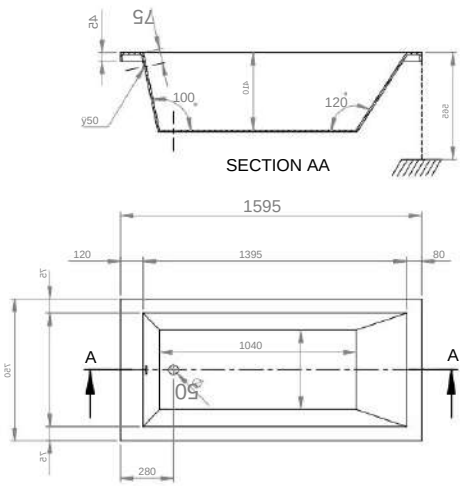

Minimal. 160x70

178

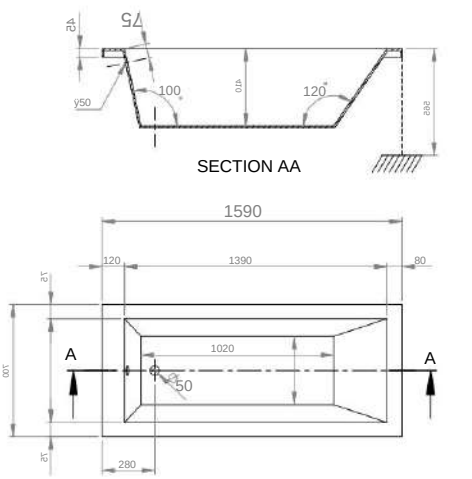

Minimal. 150x70

178

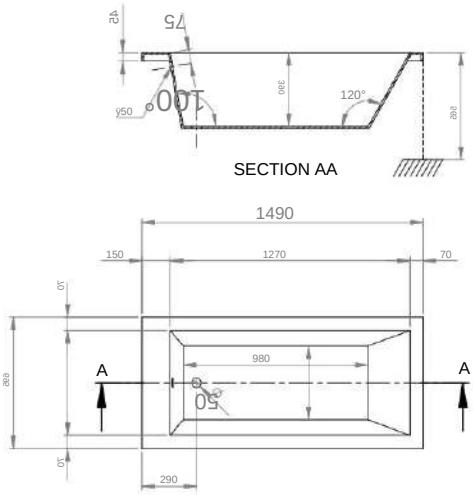

Minimal. 140x70

178

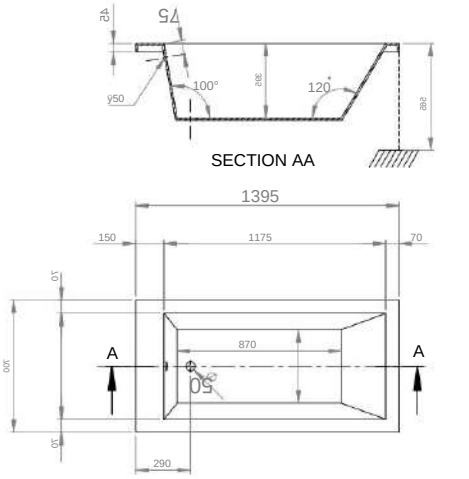

Machine Translated by Google

Minimal. 130x70

178

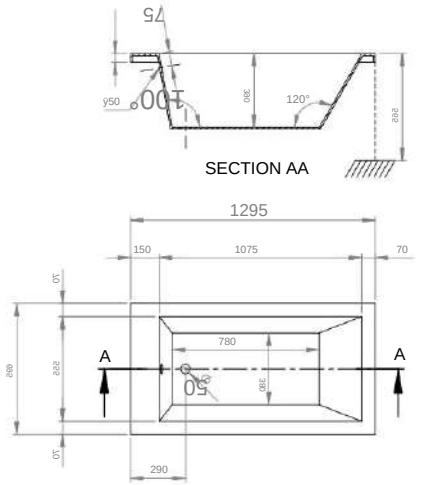

Star Line Classic. 170x70

180

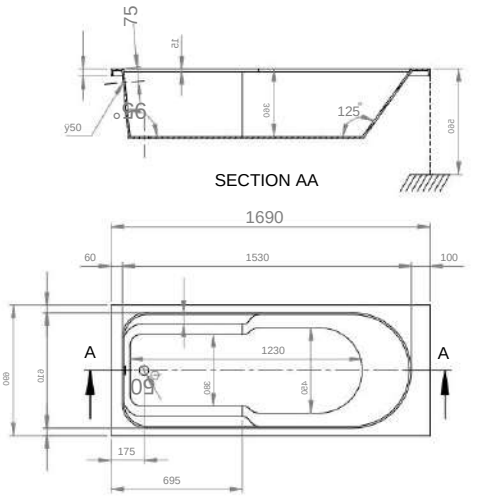

Star Line Classic. 160x70

180

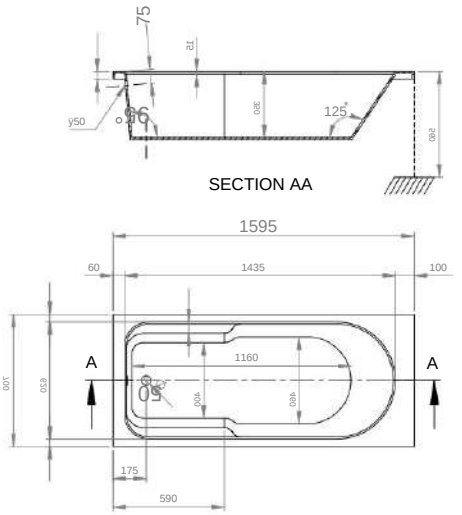

Star Line Classic. 150x70

180

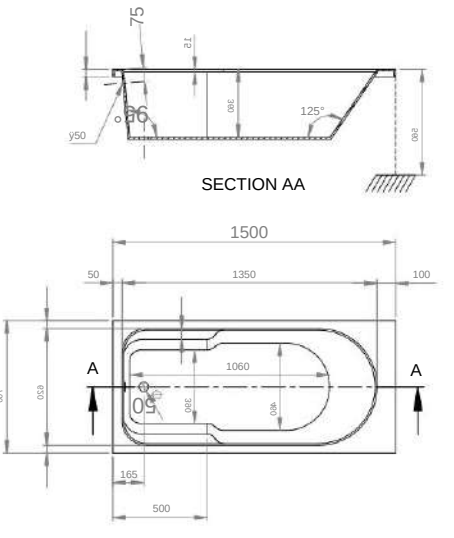

Machine Translated by Google

Star Line Classic. 140x70

180

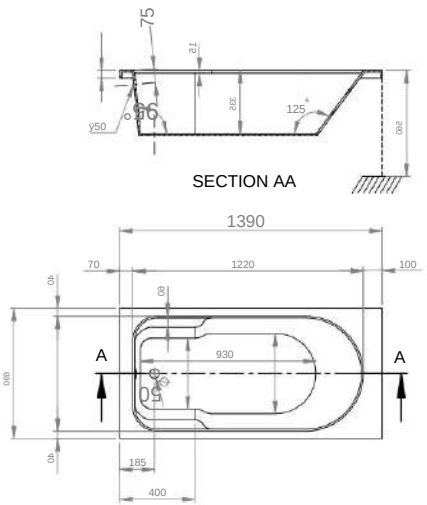

Star Line Classic. 130x70

180

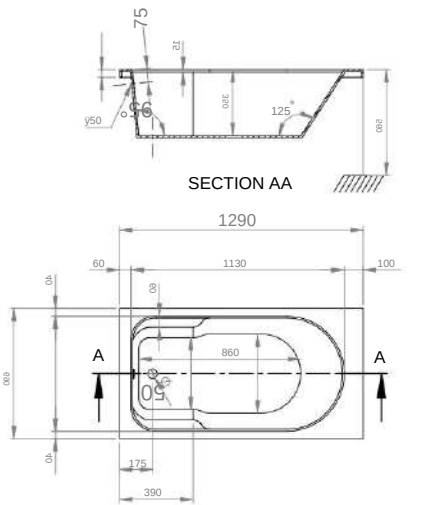

Star Line Classic. 120x70

180

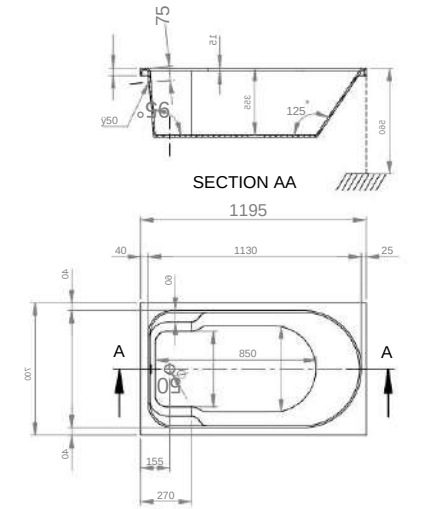

Star Line Classic. 105x70

180

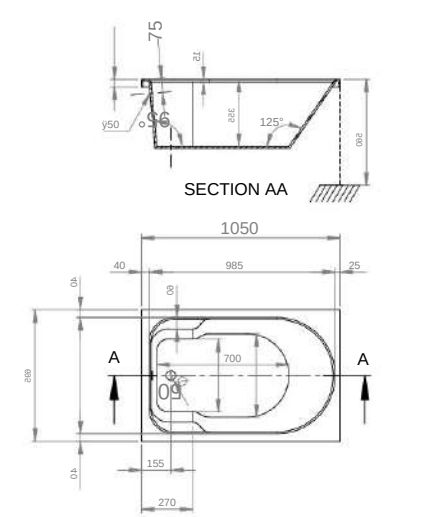

ACRILAN

Machine Translated by Google

Star Line.155x100 [1]

182

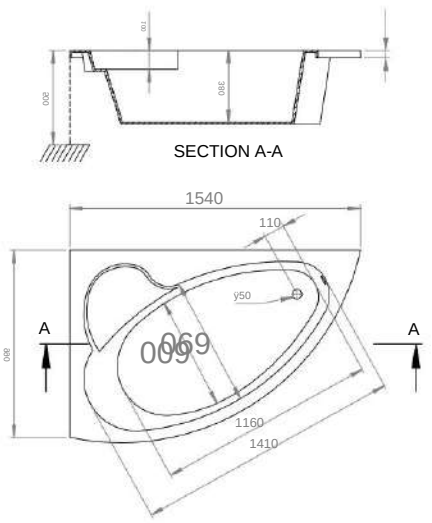

Star Line.155x100 [2]

182

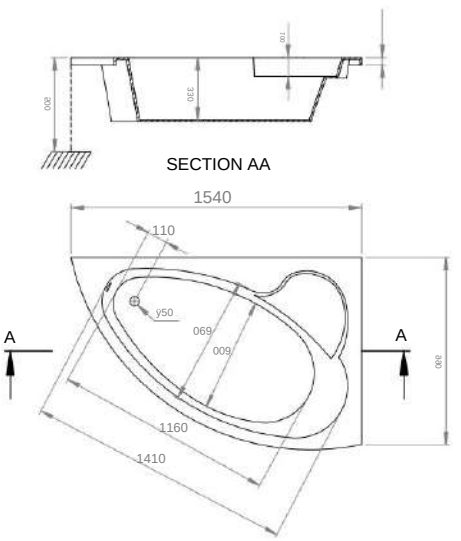

Star Line.125x125

184

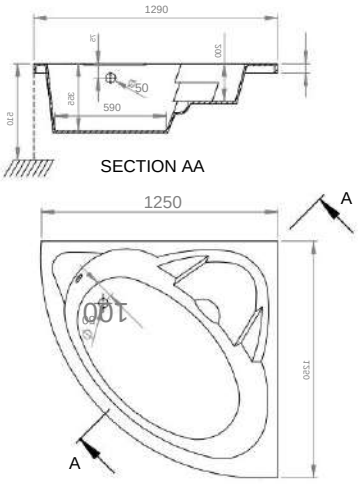

*

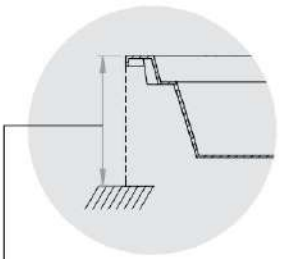

Anticipated height of bathtub installation, when installed with aprons.

Expected bathtub installation height when fitted with panels.

Machine Translated by Google

Placing an apron with a perimeter base.

Panel installation perimetric support base

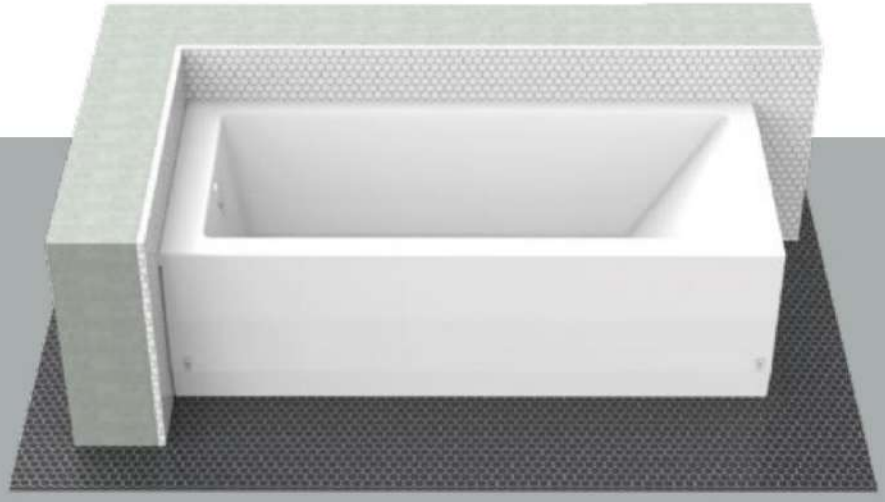

Machine Translated by Google

Machine Translated by Google

Slim.160x80

224

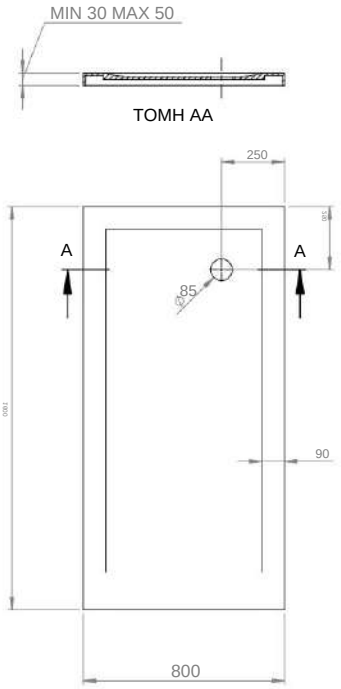

Slim.140x80

224

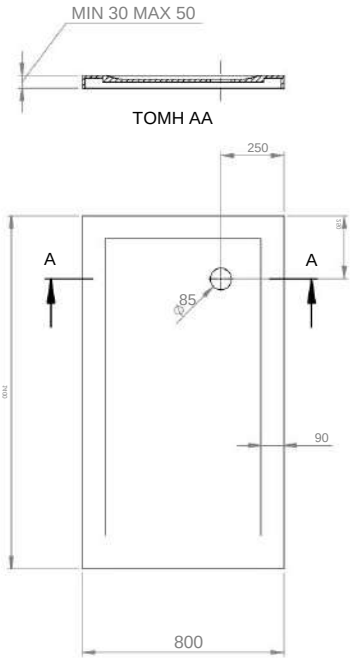

Slim.120x80

224

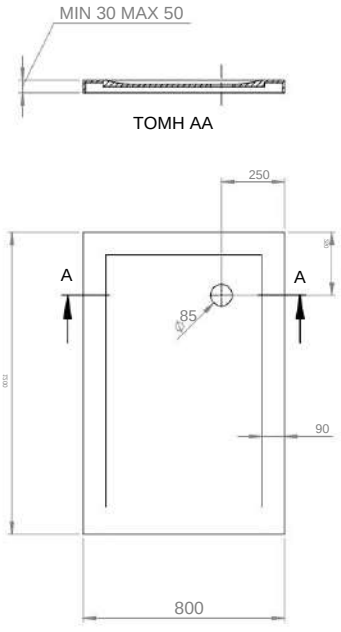

Slim.100x80

224

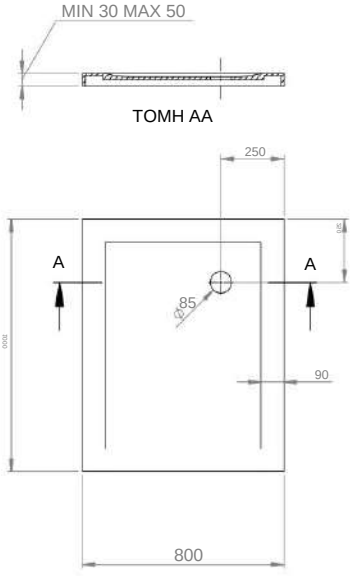

Machine Translated by Google

Slim.170x70

224

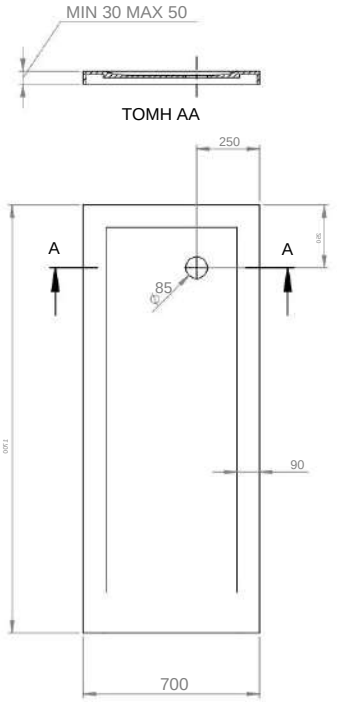

Slim.150x70

224

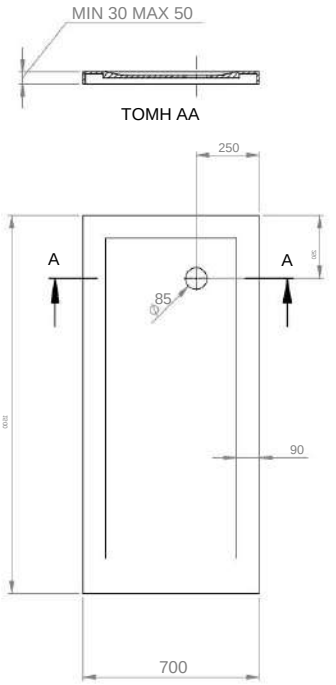

Slim.120x70

224

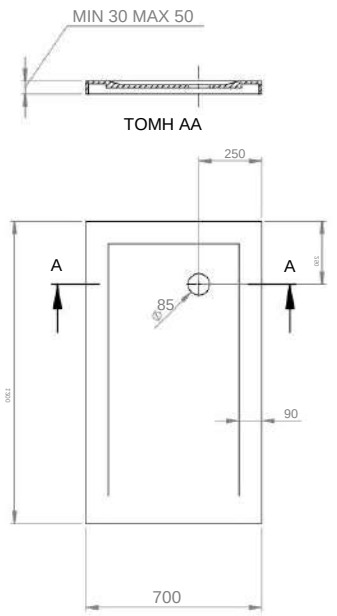

Fossato.160x80

226

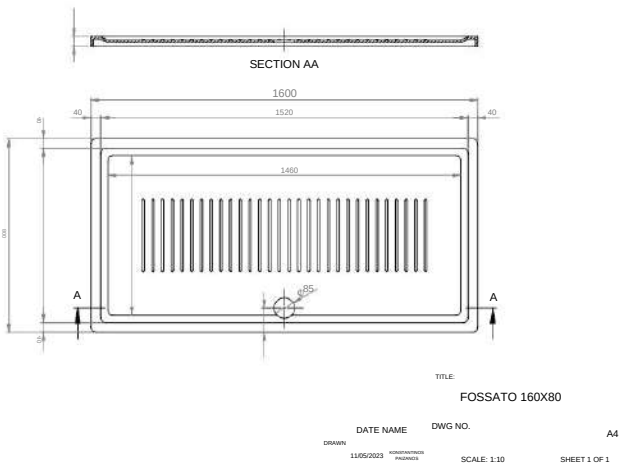

Machine Translated by Google

Rectangular. 150x80

226

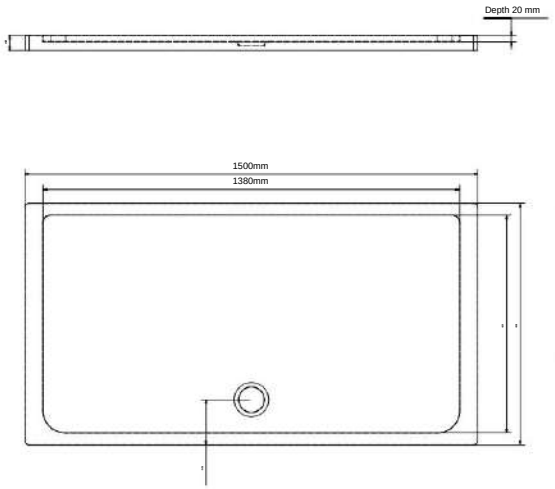

Square.

227

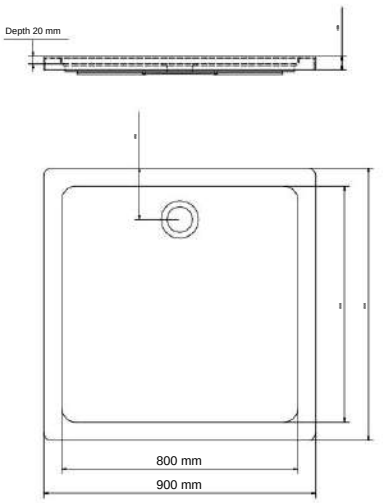

Corner Slim.

227

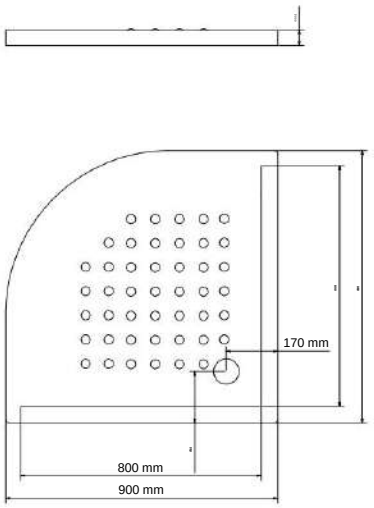

Corner.

227

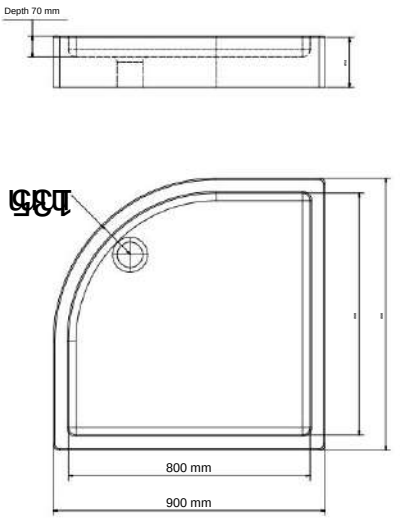

Machine Translated by Google

304

Acrilan is not responsible for any typographical errors in this catalog. The images are indicative and may differ from the actual products. The material of the catalog (photos, texts, etc.) is the intellectual property of Acrilan and its copying and use is prohibited without its approval.

Acrilan is not responsible for any typographical errors in this catalog.
The images are indicative and may differ from the actual products.
The material of this catalog (photos, texts, etc.) is the intellectual property of Acrilan and its copying and use is prohibited without its approval.

© Copyright 2023: ACRILAN SA

acrilan Water Experience

Machine Translated by Google

Machine Translated by Google

acrilan
Water Experience

Chalkidona, Thessaloniki, 57007 Greece
T: +30 23910 23117, 23910 23512 | F: +30 23910 23060 | E: info@acrilan.gr | W: www.acrilan.gr